Current Tools

FOR THE PROFESSIONAL ELECTRICIAN

747 Omni™ Bender

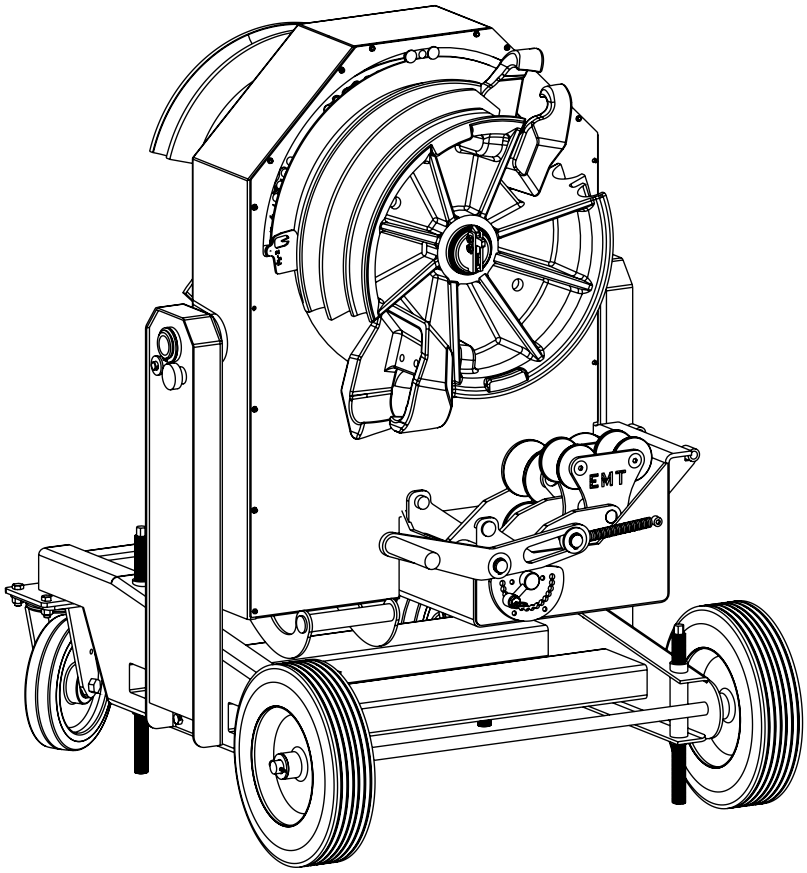

Operating, Maintenance, Safety and Parts Manual

10/2026

Read and understand this material before operating or servicing this Bender. Failure to understand how to safely operate and service this unit may result in serious injury or death.

This manual is free of charge. All personnel who operate or service this Bender should have a copy of this manual and read and understand its contents. To request a copy, call, write to the address below or visit our website at www.currenttools.com. All information, specifications and product designs may change due to design improvements or updates and are subject to change without notice. Current Tools does not assume any liability for damages resulting from misuse or incorrect application of its products.

CURRENT TOOLS • P. O. BOX 17026 GREENVILLE, SC 29606
800.230.5421 or 864.721.4230 • FAX 864.721.4232
www.currenttools.com

TABLE OF CONTENTS

Safety Alerts 3
Important Safety Information 4, 5
Specifications – 747 Omni™ Bender 6
Features 6, 7
Grounding Instructions 8
Transporting 9
Set Up 10, 11
Shoe Set-Up 12, 13
Bend Angle Limit Switch and Stop Switch 14, 15
Support Roller Return Spring 16
1/2" to 1¼" Bending Instructions 17, 18
1½" and 2" Bending Instructions 19, 23
1/2" to 2" Bending Instructions – PVC Coated Rigid 24, 25
Bend Degree Pointer Adjustment 26
Stub Up Bending Information 27
Springback Charts 28
Offset Bending Information and Charts 29, 30
Maintenance 31-33
Troubleshooting 34, 35
Exploded Views and Parts List 36-45
Electrical System Diagram 46

Safety Alert Symbol

THIS SAFETY SYMBOL is used to call your attention to instructions that concern your personal safety. It means: ATTENTION! BE AWARE! THIS IS AN IMPORTANT SAFETY INSTRUCTION!

Read, understand, and follow these safety instructions. Failure to follow these safety instructions may result in injury or death.

DANGER

Immediate hazards which, if not avoided, WILL result in serious personal injury or death.

WARNING

Hazards or unsafe practices which, if not avoided, COULD result in serious personal injury or death.

CAUTION

Hazards or unsafe practices which, if not avoided, COULD result in minor personal injury or property damage.

RETAIN SAFETY INFORMATION

This manual should be read and understood by all personnel who operate or service this Bender. Failure to understand how to safely operate and service this unit could result in serious injury or death. This unit should only be operated and serviced by qualified personnel.

IMPORTANT SAFETY INFORMATION

⚠ WARNING NEVER operate the bender in an explosive atmosphere.

⚠ WARNING NEVER operate the bender in wet or damp locations. DO NOT expose the bender to rain.

⚠ WARNING ALWAYS use 120 VAC, 20 amp ground fault protected receptacle for power supply that is properly installed and meets all applicable electrical codes. See grounding instructions on page 8.

⚠ WARNING ALWAYS inspect power cord before using bender. Replace damaged or worn cords. DO NOT modify the plug provided with the bender.

⚠ WARNING ALWAYS make sure the circuit breaker switch is in the "off" position before plugging in. This will reduce the risk of unintentional starting.

⚠ WARNING ALWAYS use 12-gauge extension cords that have three prong grounding type plugs and three-hole receptacles that accept the bender's plug. DO NOT use an adapter.

⚠ WARNING NEVER use an extension cord longer than 100 feet. NEVER use a damaged extension cord.

⚠ WARNING ALWAYS disconnect power to the bender before servicing or changing shoes, attachments or supports, and when not in use.

⚠ WARNING NEVER alter this equipment. Doing so will void the warranty and could cause serious injury or death.

⚠ WARNING NEVER remove guards, they are installed for your protection.

⚠ WARNING ALWAYS check for damaged or worn parts. Check for alignment of moving parts, binding of moving parts, breakage of parts, mounting and any other conditions that may affect its operation. A guard or other part that is damaged should be properly repaired or replaced.

⚠ WARNING ALWAYS keep hands and feet away from pinch points such as bending shoes, rollers and conduit when bender is in use.

⚠ WARNING Operator must ALWAYS face the front of the bender with the bending degree scale visible and maintain a minimum of 3 feet distance while the conduit is being bent. All other personnel must remain out of the area while the bender is in operation.

⚠ WARNING If bending shoe will not turn, STOP unit and unplug before checking for any obstructions.

⚠ WARNING DO NOT use bender or attachments to do a job for which it was not designed.

⚠ WARNING ALWAYS keep the path of the bending conduit clear of obstructions. Make sure all obstructions are clear of the bending path BEFORE you bend the conduit.

⚠ WARNING NEVER stand on bender. Serious injury could occur if the bender is tipped or if the bending shoe is unintentionally contacted.

⚠ WARNING ALWAYS wear approved safety glasses when servicing or operating this bender.

⚠ WARNING ALWAYS wear proper apparel. Do not wear loose clothing, gloves, neckties, rings, bracelets, or other jewelry which may get caught in moving parts. Non-slip footwear is recommended. Wear protective hair covering to contain long hair.

⚠ CAUTION ALWAYS use appropriate shoe groove and roller support for the type and size conduit to be bent.

⚠ CAUTION ALWAYS keep conduit under control when unloading.

⚠ CAUTION Some accessories and components exceed 50 lbs. and will require more than one person to lift, transport and assemble.

⚠ CAUTION DO NOT bend over 105°. Doing so will cause the hook on the other side of the shoe to collide with the conduit.

⚠ CAUTION KEEP CHILDREN AWAY. All visitors should be kept at a safe distance from work area.

⚠ CAUTION MAKE WORKSHOP KID PROOF with padlocks, master switches or by removing starter keys.

SPECIFICATIONS – 747 OMNI BENDER

height	**45 ¼"**
width	**32 ½"**
length	**44"**
weight	**615 lbs (with shoes)**
power requirement	**120 Vac 20 amp GFCI protected circuit**
capacity	**½" thru 2" Rigid conduit** **½" thru 2" EMT conduit** **½" thru 2" IMC conduit** **½" thru 2" Rigid aluminum conduit** **½" thru 2" schedule 40 steel pipe** **½" thru 2" 40 mil PVC coated Rigid conduit —** **(with optional shoe and roller support)**

NOTE: The 747 Omni Bender is NOT to be used for bending any conduit or steel pipe with wall thickness above schedule 40.

Bend Radius Chart

Size	EMT	IMC	Rigid	PVC Coated Rigid
1/2"	4-5/16"	4-1/4"	4-1/4"	4-1/4"
3/4"	5-1/2"	5-7/16"	5-7/16"	5-7/16"
1"	7"	6-15/16"	6-15/16"	6-15/16"
1 1/4"	8-13/16"	8-3/4"	8-3/4"	8-3/4"
1 1/2"	8-3/8"	8-1/4"	8-1/4"	8-1/4"
2"	9-1/4"	9"	9"	9"

FEATURES

- Only two shoes needed to bend 1/2" to 2" Rigid, EMT and IMC conduit. Optional shoe set bends 1/2" to 2" 40 mil PVC coated Rigid conduit.
- Proven electrical control system.
- Four large casters for ease in moving.
- Remote pendant with magnet.
- Fork pockets for easy lifting.
- Tilts for horizontal bending in a table top position.
- Quick squeeze adjustment for EMT, IMC and Rigid conduit support rollers.
- Adjustable bend angle limit switch for accurate repeat bends.
- Four leveling screws for stability and leveling when bending.
- Lockable storage box for accessories.
- Position locking screw to remove excess play in bender power unit.

Front View

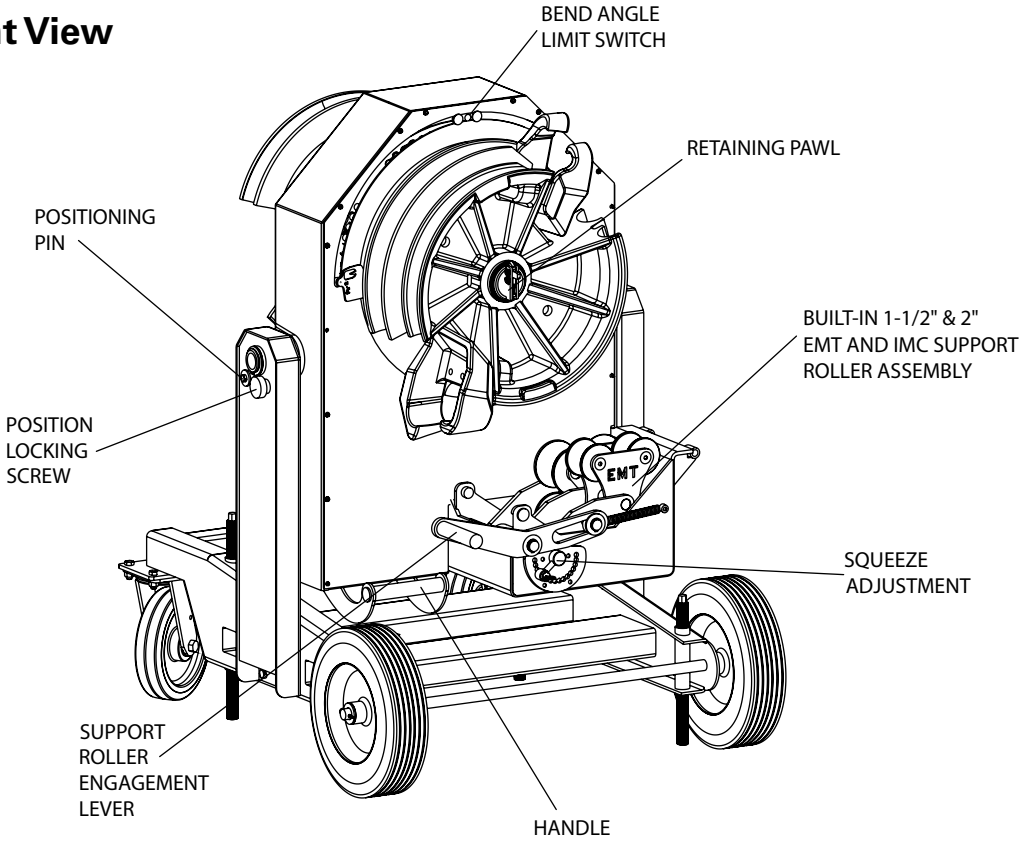

Rear View

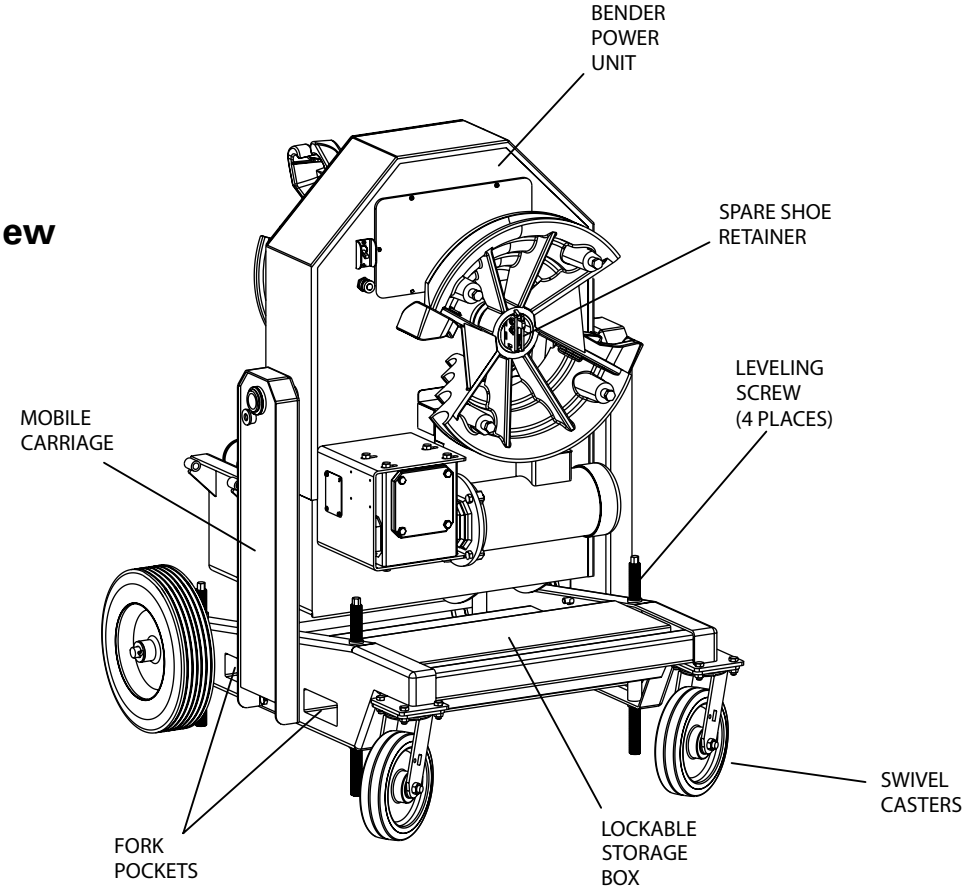

GROUNDING INSTRUCTIONS

⚠ WARNING

ELECTRIC SHOCK HAZARD! Only connect the bender to a 20 amp GFCI protected circuit. Do NOT modify the plug which is provided with the unit. Failure to follow these warnings can result in serious injury or death.

This bender is intended for use on a circuit that has a receptacle that looks like the one illustrated below. The bender has a grounding plug that looks like the plug illustrated below.

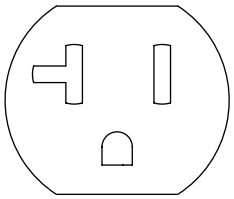

RECEPTACLE

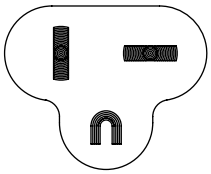

PLUG

In the event of a malfunction or breakdown, grounding provides a path of least resistance for electric current to reduce the risk of electric shock. The bender is equipped with an electric cord having an equipment grounding conductor and a grounding plug. Only connect the bender to a 20 amp GFCI protected receptacle which is properly installed and grounded to meet all applicable electrical codes. DO NOT use an adapter.

DO NOT modify the plug provided. If it will not fit the receptacle, have the proper receptacle installed by a qualified electrician.

Improper connection of the equipment grounding conductor can result in risk of electric shock. The conductor with insulation having an outer surface that is green with or without yellow stripes is the equipment grounding conductor. If repair or replacement of the electric cord or plug is necessary, do not connect the equipment grounding conductor to a live terminal.

Check with a qualified electrician or service personnel if the grounding instructions are not completely understood, or if in doubt as to whether the bender is properly grounded.

Use only 3-wire extension cords that have 3-prong grounding plugs and 3-pole receptacles that accept the bender's plug.

Repair or replace damaged or worn cord immediately.

TRANSPORTING

⚠ WARNING

ALWAYS rotate the bender power unit into the horizontal position before lifting, rolling or any type of transporting.

To rotate into the horizontal position:

1. Unscrew the position locking screw until it clears the bender power unit.
2. While holding the handle, pull the spring loaded positioning pin. Then use the handle to rotate the bender power unit into the horizontal position.
3. The spring loaded positioning pin will snap into place when you reach the horizontal position.
4. To remove excess play, tighten the position locking screw.

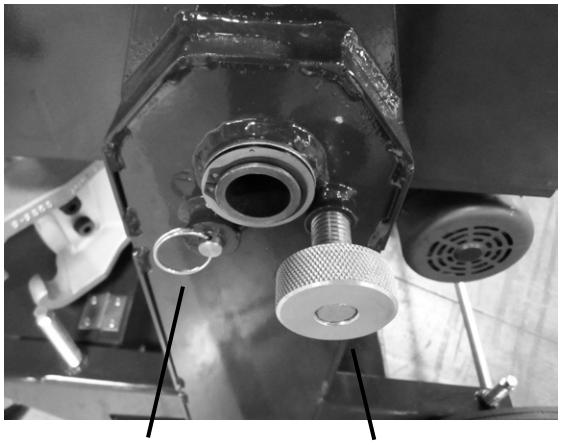

To roll:

Push and steer the 747 Omni Bender by using the handle and the bottom of the roller support housing.

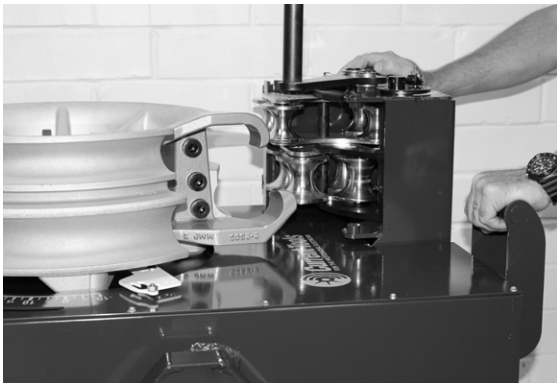

To lift:

Use the two fork pockets on either side of the unit to lift with a forklift.

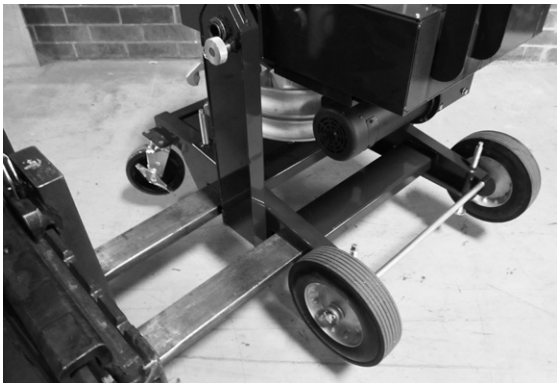

Lock the two swivel casters when you reach the desired location.

To stablilize the bender:

Using a 1/2" socket, lower at least two of the leveling screws to hold the bender in place.

To level the bender (if needed):

Lower the remaining two leveling screws and adjust as required.

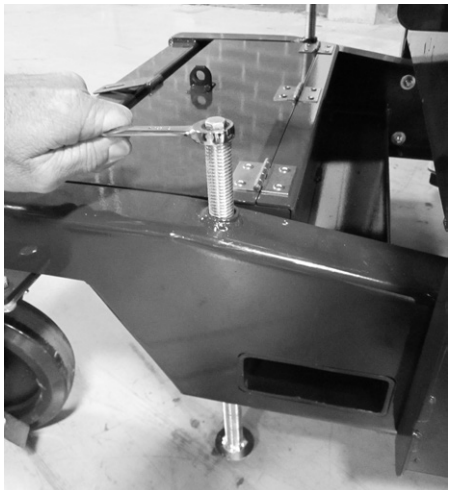

The 747 Omni Bender has two bending positions – horizontal and vertical.

If desired, rotate the bender power unit into the vertical position:

1. Unscrew the position locking screw until it clears the bender power unit.

2. While holding the handle with one hand, pull the spring loaded positioning pin (you may need to slightly lift up on the handle to relieve pressure on the positioning pin).

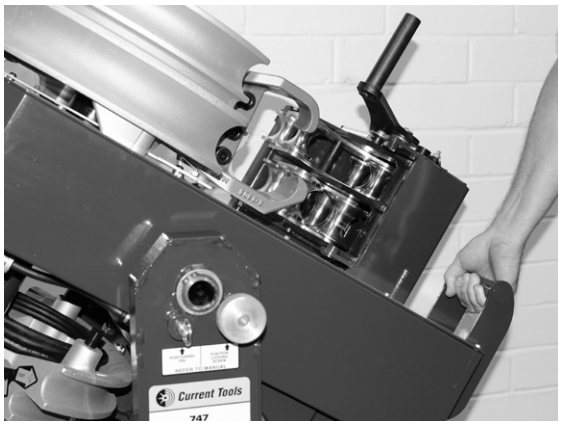

3. While continuing to hold the handle, rotate the bender power unit into the vertical position.
4. The spring loaded positioning pin will snap into place when you reach the vertical position.
5. To remove excess play, tighten the position locking screw.
6. Connect the power cord to a 20 amp, GFCI protected circuit.

7. Place the circuit breaker switch in the “on” position.

SHOE SET-UP

The 747 Omni Bender is equipped with everything needed to bend ½" thru 2" EMT, IMC, Rigid steel and Rigid aluminum conduit. Also, 40 mil PVC coated Rigid conduit can be bent with optional shoe and roller support.

1. Choose the shoe for the size conduit you will be bending. The 747 Omni Bender has a four groove bending shoe for ½" thru 1¼" EMT, IMC and Rigid conduit. The two groove shoe bends 1½" and 2" EMT, IMC and Rigid conduit.

   If your chosen shoe is not on the front nose of the bender, you must remove both shoes and switch their positions.

NOTE: Both shoes are retained by spring loaded pawls. Press down on the spring loaded retainer pawls to remove both shoes (see photo at right).

2. Place the shoe you are not using onto the spare shoe tube located on the rear of the bender.
3. Next, you must rotate the bend degree pointer for the size shoe you have chosen to the minus ten degree (-10˚) position. To do this set the switch on the pendant to the "UNLOAD" position. Then press the "JOG" button and rotate the bend degree pointer that matches the size shoe you have chosen until it is at the minus ten degree (-10˚) position. (See photos below).

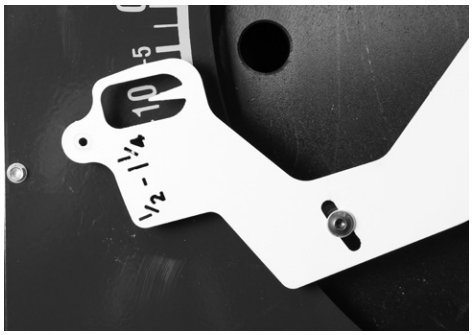

Pointer set for the ½"-1¼" shoe

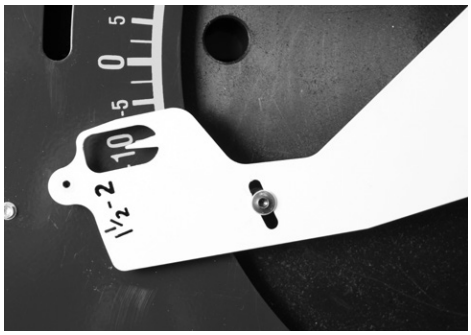

Pointer set for the 1½"-2" shoe

NOTE: Because the pointer will only activate the Bend Angle Limit Switch and Stop Switch in the clockwise direction, be sure to rotate the pointer in the counter-clockwise direction when positioning the pointer.

SHOE SET-UP – *CONTINUED*

The drive sprocket on the 747 Omni Bender has 2 large holes and 2 small holes to accept the bending shoe drive studs. Therefore, each shoe will mount in 2 positions. When mounting the shoes, align the large drive studs with the large holes and the small studs with the small holes. (See drawing below).

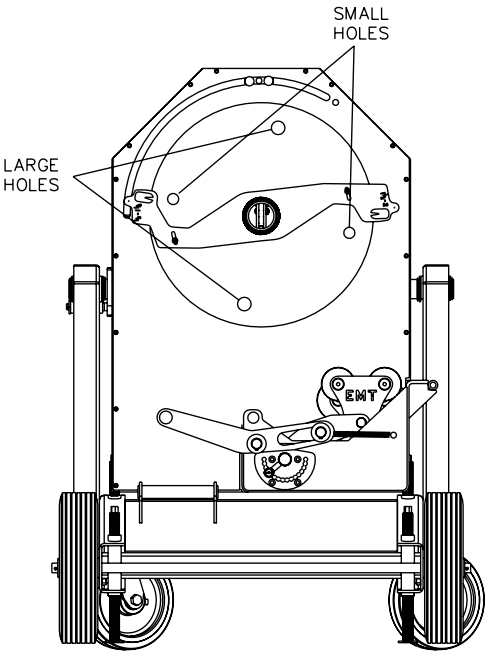

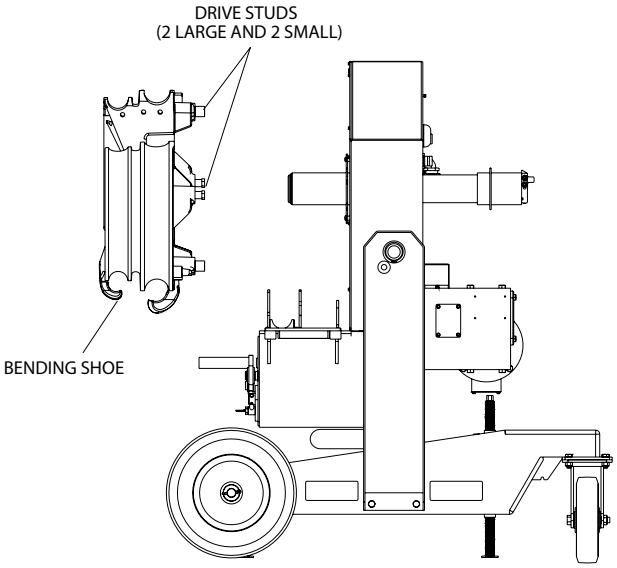

4. Place the shoe on the bender so that the hook for the type conduit to be bent is at approximately the 6 o'clock position.

   Note that the bending shoe hooks are color coded. The blue hooks are for Rigid and IMC conduit and the silver hooks are for EMT conduit.

NOTE: The bending shoe should be pushed completely onto the nose of the bender to allow the retaining pawl to secure the bending shoe.

NOTE: Photo shows the 1 ½" to 2" shoe positioned to bend Rigid or IMC Conduit.

BEND ANGLE LIMIT SWITCH AND STOP SWITCH

The 747 Omni® Bender has an adjustable bend angle limit switch for easy repeat bends. The bend angle limit switch will adjust from approximately five degrees (5°) to one hundred and five degrees (105°).

1. To set the Bend Angle Limit Switch, slide to the desired degree of bend. (See photo below).

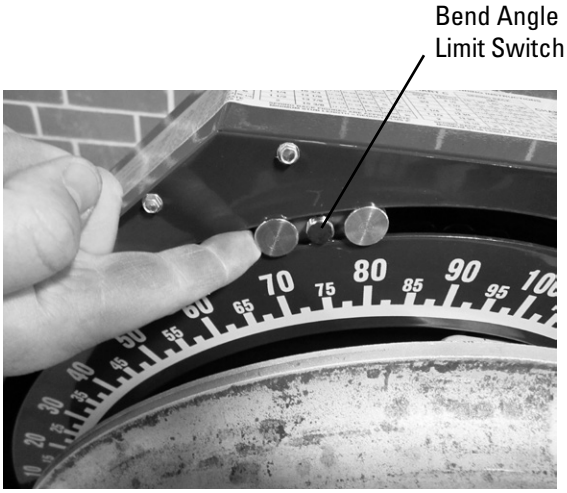

NOTE: The pointers will only activate the bend angle limit switch when operating in the clockwise (bending) direction.

⚠ CAUTION

DO NOT bend over 105°. Doing so will cause the hook on the other side of the shoe to collide with the conduit.

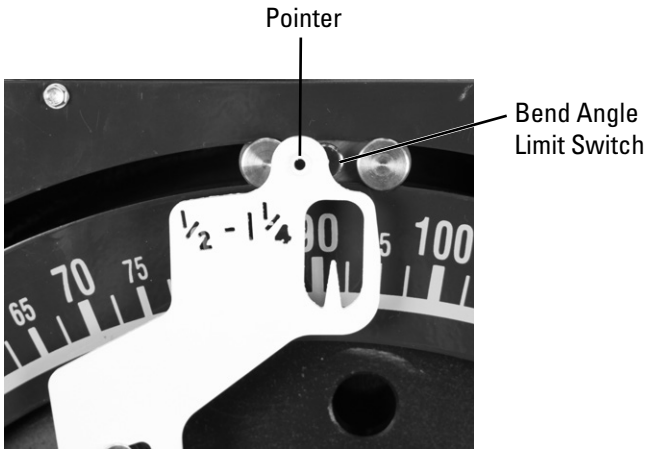

2. When the pointer reaches the Bend Angle Limit Switch, the bender will stop.
3. If you do not want to use the Bend Angle Limit Switch, before bending, slide it clockwise as far as possible (about 105°).
4. An internal stop switch is provided to help avoid damage to the shoe hook and roller assembly.

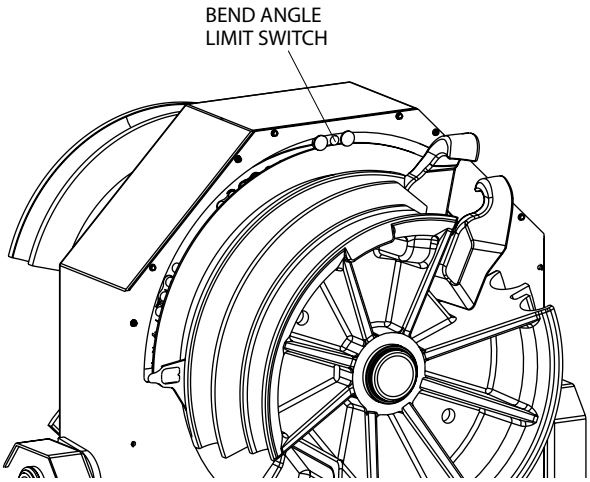

NOTE: The stop switch noted in #4 above is located behind the face plate and main sprocket of the bender and is designed to stop the bender shoe from turning if the pointer does not activate the Bend Angle Limit Switch, thus avoiding damage to the shoe hook and roller assembly.

NOTE: If the stop switch activates and stops the bending shoe from turning in the bend direction, change the Bend/ Unload switch to the Unload position and press jog button to turn the shoe in the counter-clockwise direction.

NOTE: If the pointer passes the Bend Angle Limit Switch in the bending direction and does not stop, see page 26 for troubleshooting instructions.

SUPPORT ROLLER RETURN SPRING

In addition to the stop switch that is provided to help avoid damage to the shoe hook and built-in support roller assembly, the 747 Omni™ Bender has a return spring installed on the built-in support roller assembly (See Figure A1). The return spring is designed to return the support rollers to the down position (See Figure A2) after a bend is completed. Returning the support roller assembly to the down position after a bend will help prevent the bender shoe hooks from contacting the rollers when the rollers are not in use.

Support roller assembly shown in raised (bending) position

Figure A1

Return Spring

Support roller assembly shown in down position

Figure A2

½" TO 1¼" BENDING INSTRUCTIONS – EMT, IMC AND RIGID

1. Select and mount the ½" to 1¼" shoe as described in the shoe set-up section on pages 12 and 13.
2. Next, install the ½" thru 1¼" pin-on roller support (see photo below).

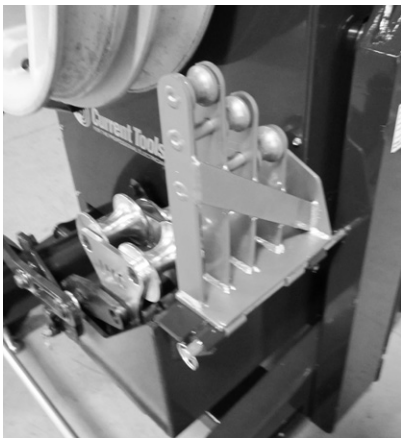

½" thru 1¼" EMT, IMC and Rigid conduit all use the pin-on 4 roller support. (Part #747-972)

Attach the pin-on roller support as shown below:

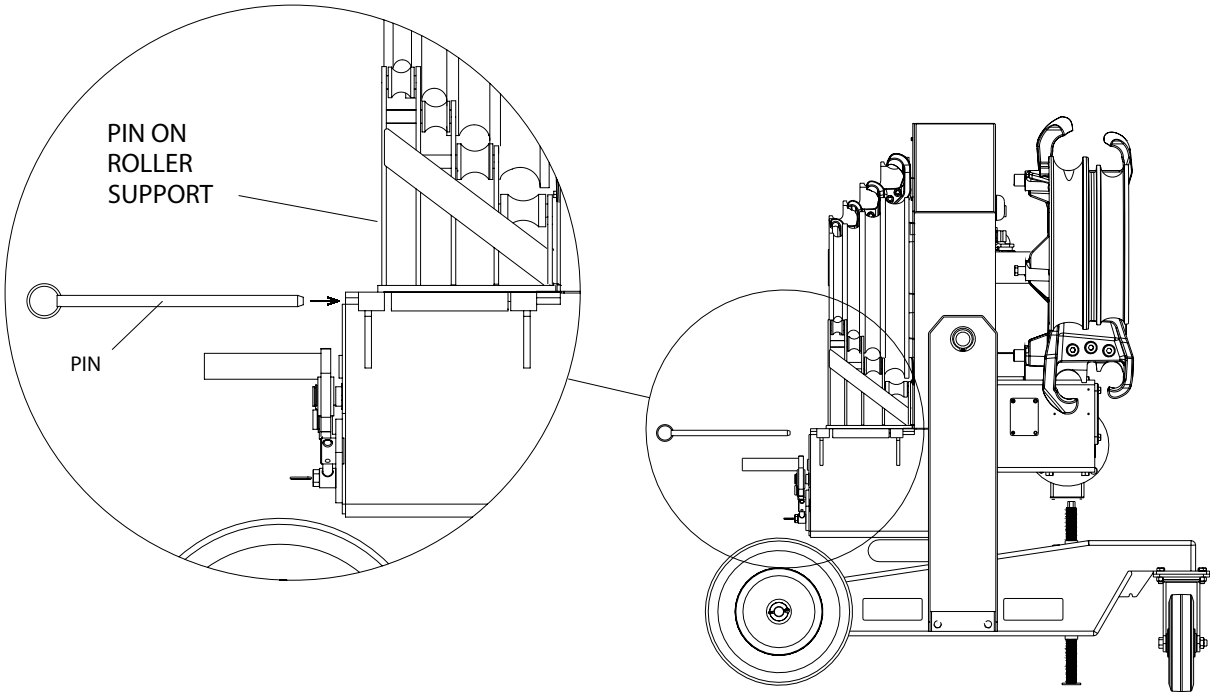

— CONTINUED

3. Next, mark conduit to desired length. Note that a minimum of 2" from the end of the conduit to the front edge of the hook is required to eliminate flattening the end of the conduit. See figure below.

NOTE: Stub-up and offset information can be found on pages 27-30 in this manual or on the bending instruction decal on top of each bender.

4. Rotate the bending shoe so that the bend degree pointer is at the minus ten degree (-10˚) position as shown in the figure below.

5. Place conduit into the bender. The conduit should slide over the roller support, through the shoe groove and into the hook. The bending mark should be at the front (outside) edge of the hook. See figure below.

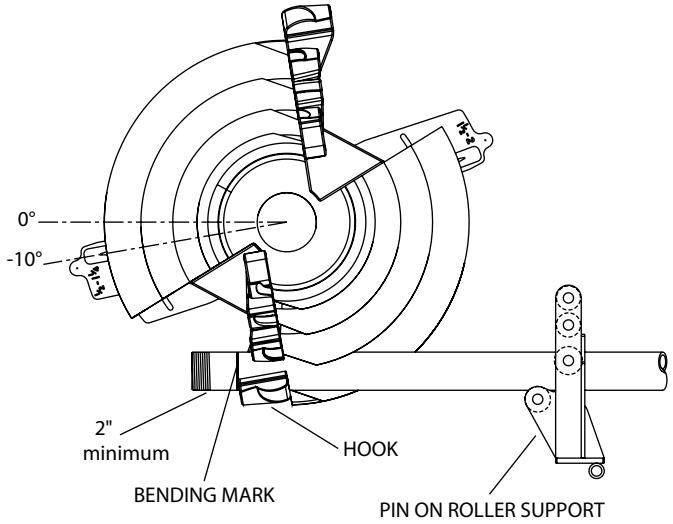

6. After consulting the springback chart (found on page 28 in this manual or on the bender instruction decal on the top of each bender), slide the bend angle limit switch to the desired degree. NOTE: If you do not want to use the bend angle limit switch, slide it clockwise as far as possible (about 105°). See pages 14 and 15 for bend angle limit switch information.

7. Place the pendant switch in the "BEND" position. Press the "JOG" button and advance the bender shoe. Be sure to check the alignment of the bending mark as the rotating shoe locks the conduit into position. Advance the bender shoe to desired degree of bend. When the bend degree pointer reaches the bend angle limit switch, the bender will stop.

8. To release the conduit, place the pendant switch in the "UNLOAD" position. Press the "JOG" button and reverse the shoe far enough to release the conduit. The conduit can now be removed.

⚠ WARNING

The conduit should be under control when unloading. Failure to do so may result in injury or death.

1½" AND 2" BENDING INSTRUCTIONS – EMT, IMC AND RIGID

1. Select and mount the 1½" to 2" shoe as described in the shoe set-up section on pages 12 and 13.
2. Next, install the 1½" and 2" pin-on roller support (see photo below).

1½" and 2" EMT and IMC use the pin-on urethane roller support and the built-in support roller system. (Part #747-33)

Attach the pin-on roller support as shown below:

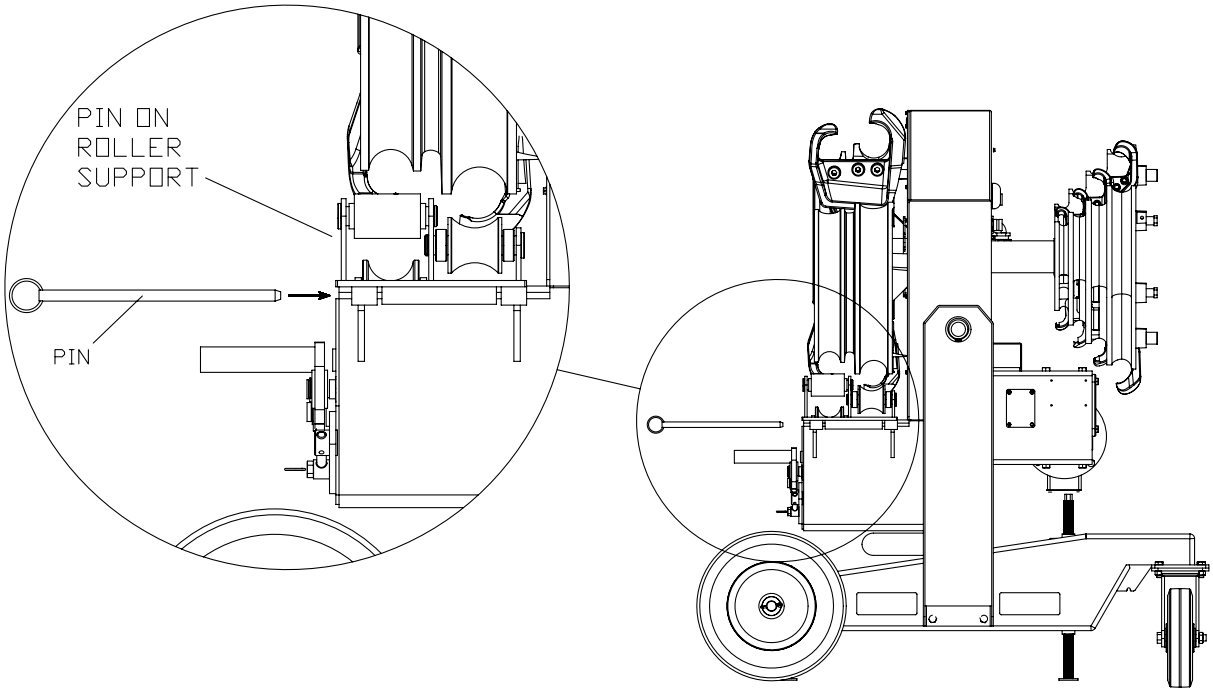

— CONTINUED

3. Rotate the bending shoe so that the bend degree pointer is at the minus ten degree (-10˚) position as shown in the figure below.
4. Mark conduit to desired length. Note that a minimum of 2" from the end of the conduit to the front edge of the hook is required to eliminate flattening the end of the conduit. See figure below.

NOTE: Stub-up and offset information can be found on pages 27-30 in this manual or on the bending instruction decal on top of each bender.

5. Place conduit into the bender. The conduit should slide over the roller support, through the shoe groove and into the hook. The bending mark should be at the front (outside) edge of the hook. See figure below.

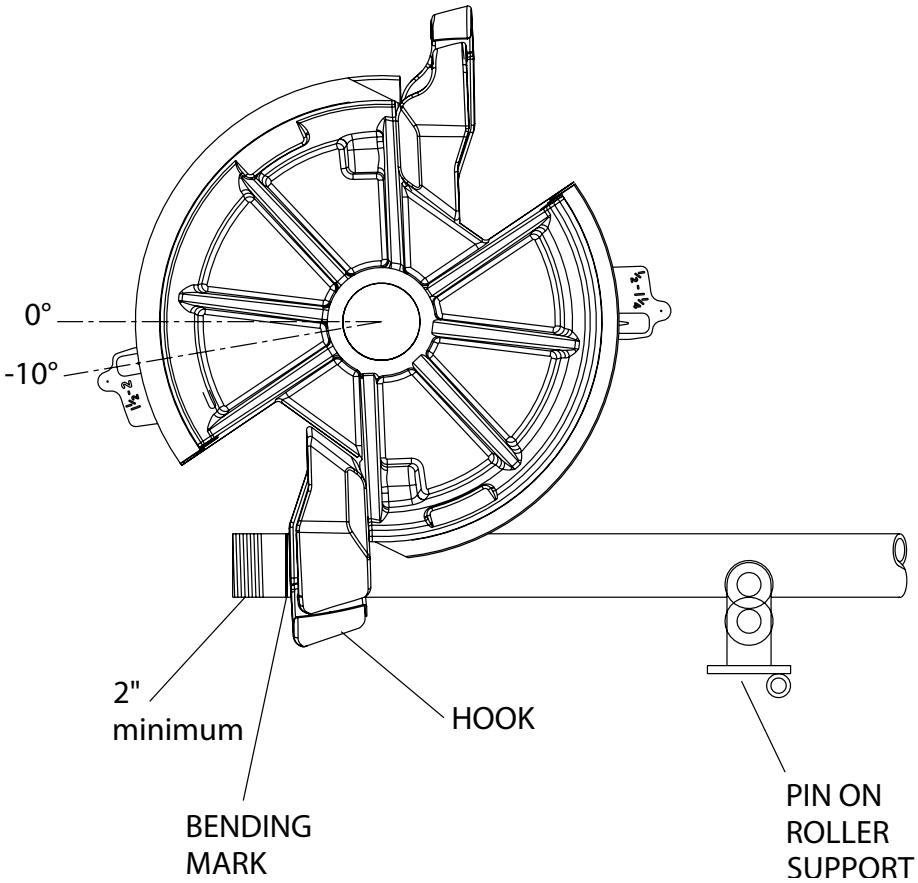

6. After consulting the springback chart (found on page 28 in this manual or on the bender instruction decal on the top of each bender), slide the bend angle limit switch to the desired degree. See pages 14 and 15 for instructions on the Bend Angle Limit Switch.

— CONTINUED

7. Push the support roller lever to lift rollers. Rotate the rollers on the built-in support roller assembly to the type conduit to be bent. NOTE: the support rollers are labeled "EMT" and "R/I" for identification.

   NOTE: R/I indicates Rigid and IMC conduits.

⚠ CAUTION

Be aware of pinch points when rotating the rollers into position. Always wear gloves.

8. The built-in support roller assembly has a squeeze adjustment feature. Recommended starting points for the type and size conduit you are bending are shown below.

<u>Beginning</u> squeeze adjustment settings

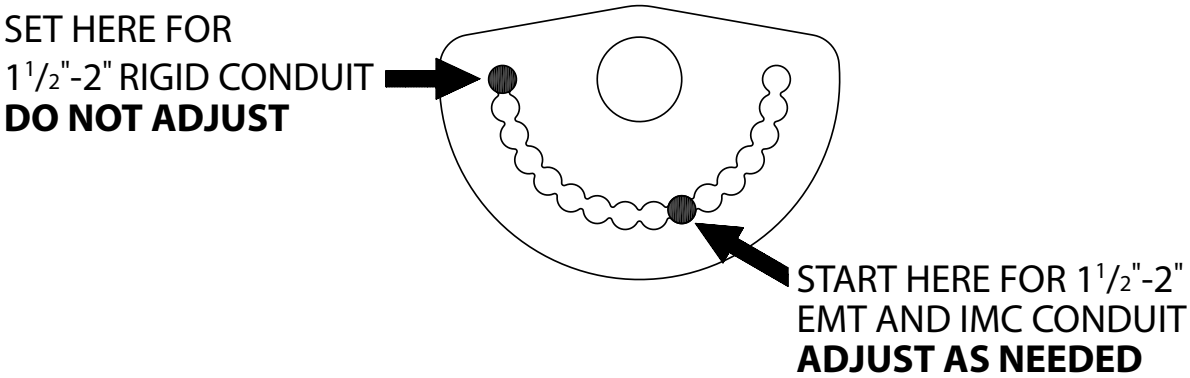

NOTE: For additional squeeze adjustment information, refer to item #14 on page 23.

— CONTINUED

9. Set the pendant switch to the "Bend" position.
10. Using the support roller lever, engage the support rollers against the conduit.

In the vertical position, use foot pressure to engage the rollers.

In the horizontal position, engage the rollers with hand pressure.

11. Keep pressure on the support roller lever and press the "Jog" button on the pendant. The conduit should pull the support roller arm against the stop (see photo below). As you continue to bend, pressure can then be removed from the support roller lever.

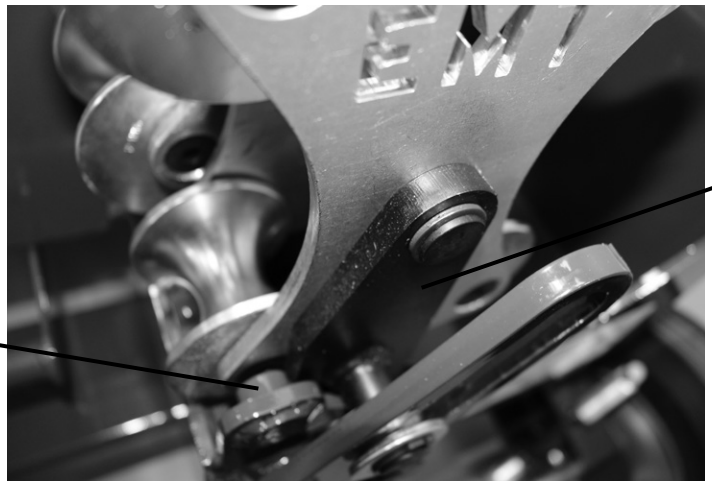

NOTE: If the support rollers will not pull against the stop, the squeeze adjustment is set too tight. Pull the ring on the squeeze adjustment pin and rotate the arm clockwise to the next hole. This will REDUCE the squeeze on the conduit.

— CONTINUED

12. Advance the bender shoe to desired degree of bend. When the bend degree pointer reaches the bend angle limit switch, the bender will stop.
13. After bending, release the conduit by placing the pendant switch in the "UNLOAD" position. Press the "JOG" button and reverse the shoe. The support rollers should drop, allowing removal of the conduit.

⚠ WARNING

The conduit should be under control when unloading.
Failure to do so may result in injury or death.

14. After removal of the conduit, inspect it for wrinkling or excessive side marks.

For EMT and IMC conduit:

- If side marking of the conduit occurs on EMT or IMC conduit, the squeeze adjustment is set too tight. Pull the ring on the squeeze adjustment pin and rotate the arm clockwise to the next hole. This will REDUCE the squeeze on the conduit.
- If the EMT or IMC conduit wrinkles when bending, the squeeze adjustment is set too loose. Pull the ring on the squeeze adjustment pin and rotate the arm counter-clockwise to the next hole. This will INCREASE the squeeze on the conduit.

For Rigid conduit:

Always set the squeeze adjustment for Rigid conduit in the lightest squeeze (9 o'clock position). DO NOT ADJUST.

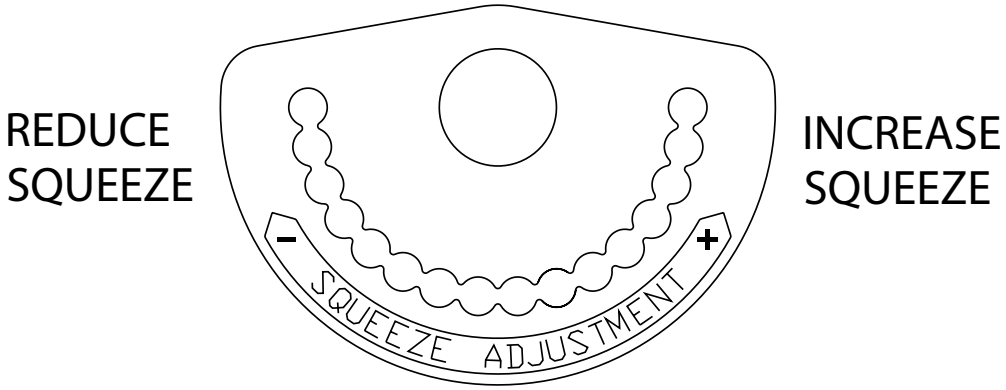

½" TO 2" BENDING INSTRUCTIONS – PVC COATED RIGID

NOTE: Prior to mounting the optional PVC Coated Rigid bending shoe onto the bender, the Pointer that is attached to the main sprocket must be removed. Once the pointer is removed, the Bend Angle Limit Switch is inoperable. The pointer should be re-installed prior to mounting either of the standard shoes back onto the bender.

1. Select and mount the optional 1/2" to 2" PVC Coated Rigid bending shoe (Part #2-3200-7) as described in the shoe set-up section on pages 12 and 13.

   NOTE: The optional PVC Coated Rigid bending shoe (Part #2-3200-7) is a single shoe that will bend the full range of PVC Coated Rigid conduit from 1/2" to 2".

2. Next, install the 1/2" thru 2" pin-on roller support (Part #2-4300-7) as shown below.

1/2" thru 2" PVC Coated Rigid conduit uses the pin-on roller support (Part #2-4300-7)

Attach the pin-on roller support as shown below:

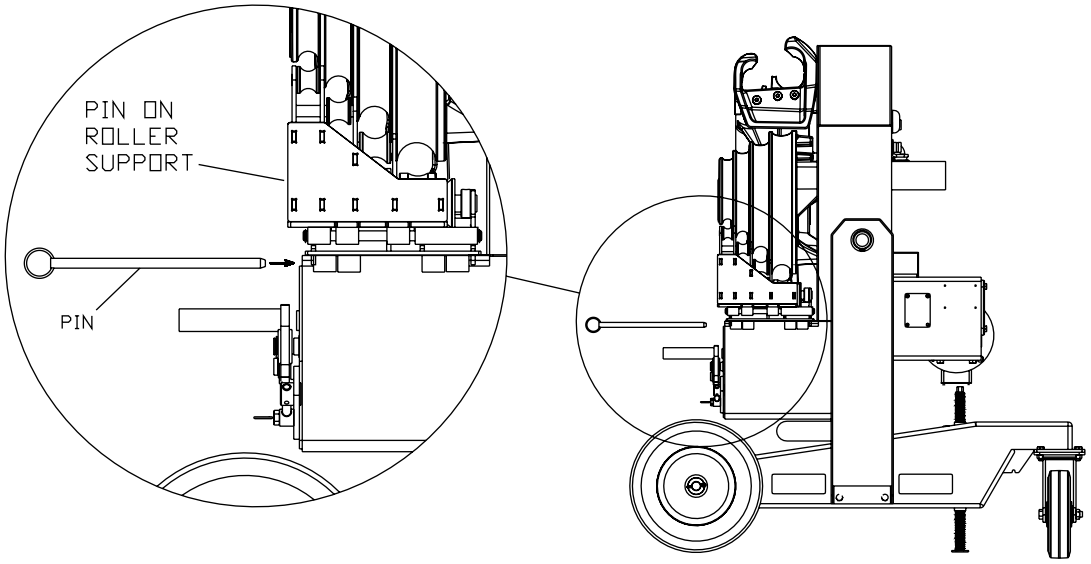

CONTINUED

3. Next, mark conduit to desired length. Note that a minimum of 2" from the end of the conduit to the front edge of the hook is required to eliminate flattening the end of the conduit. See figure below.

NOTE: Stub-up and offset information can be found on pages 27-30 in this manual or on the bending instruction decal on top of each bender.

4. Rotate the bending shoe so that the hook for the size of conduit you are bending is just before the 6 o'clock position as shown in the figure below.

5. Place conduit into the bender. The conduit should slide over the roller support, through the shoe groove and into the hook. The bending mark should be at the front (outside) edge of the hook. See figure below.

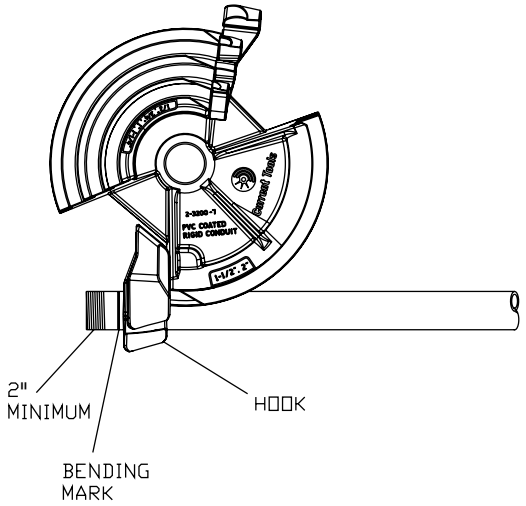

6. Place the pendant switch in the "BEND" position. Press the "JOG" button and advance the bender shoe. Be sure to check the alignment of the bending mark as the rotating shoe locks the conduit into position. Advance the bender shoe to desired degree of bend.

7. To release the conduit, place the pendant switch in the "UNLOAD" position. Press the "JOG" button and reverse the shoe far enough to release the conduit. The conduit can now be removed.

⚠ WARNING

The conduit should be under control when unloading. Failure to do so may result in injury or death.

BEND DEGREE POINTER ADJUSTMENT

Bend degree pointer may be adjusted as follows:

1. Remove the bending shoe located on the front of the bender by pressing down on the spring loaded retainer pawl and sliding the shoe off the nose tube.
2. Loosen the two bolts holding the pointer.
3. Move the pointer as desired.
4. Re-tighten the two bolts.

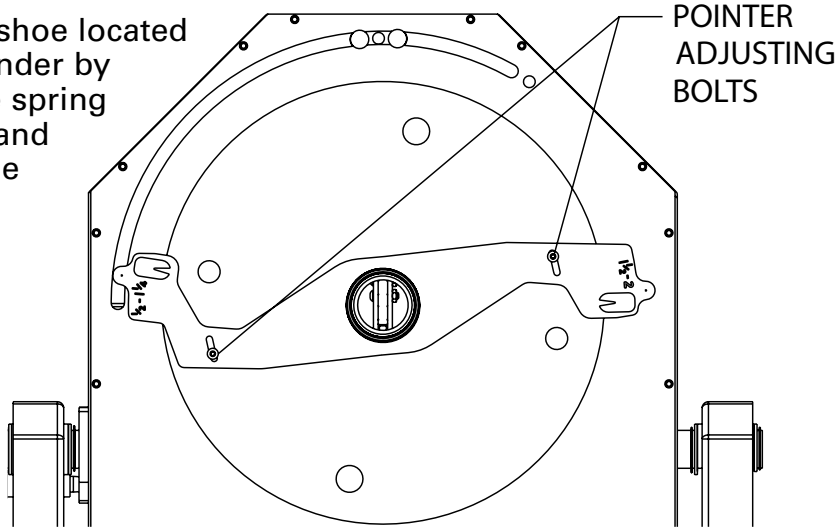

BEND DEGREE POINTER – GAP ADJUSTMENT

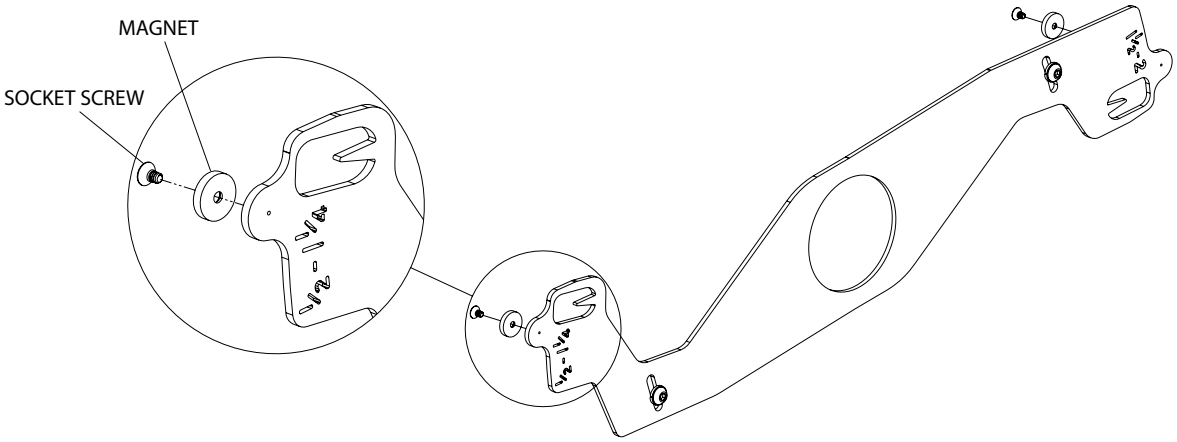

The magnets mounted on the pointer should not need any adjustments. The magnets and the bend angle limit switch should never touch, and can operate with as much as a 1/2" gap. If the pointer gets bent further than 1/2" from the bend angle limit switch, the pointer will need to be replaced.

STUB-UP BENDING INFORMATION

To locate bending marks and springback of 15, 30, 45, 60, and 90 degree bends for a desired stub:

1. Check Springback Chart A, B, or C or C1 for deduct length (See page 28). Note that minimum stub length is deduct length plus 2".
2. Measure and mark desired stub length on conduit (stub length mark). Subtract “Deduct Length" from this mark and make a second mark (bending mark). See Fig 27a and 27b. Place bending mark at front edge of shoe hook. See Figure 27c. Check Springback Chart A, B, or C or C1 for springback of desired degree of bend (See page 28). Bender should be advanced to this degree to obtain desired degree of bend.

Figure 27a

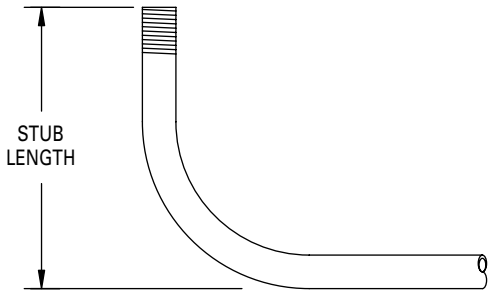

Figure 27b

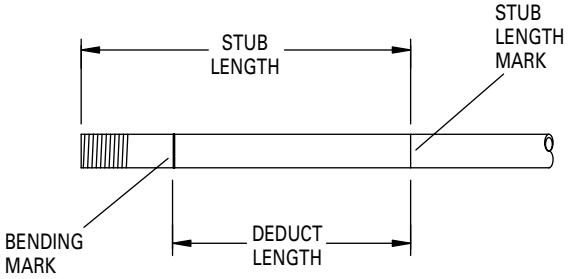

Figure 27c

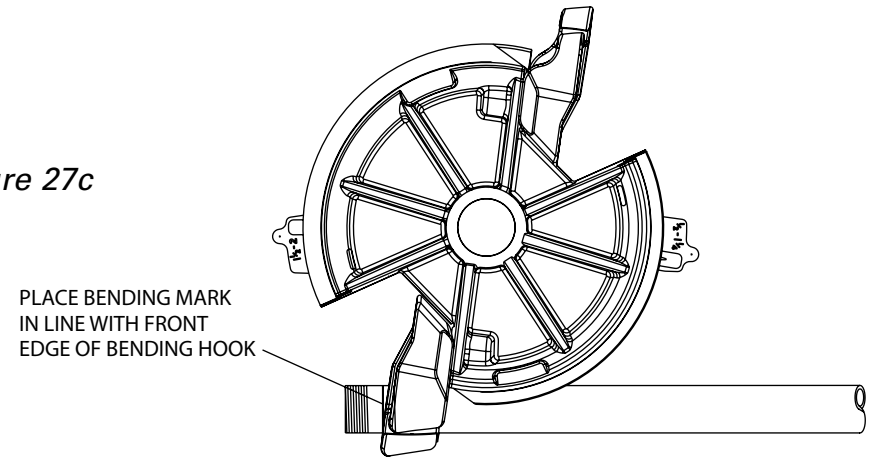

SPRINGBACK CHARTS

Chart A – RIGID Conduit/Schedule 40 Pipe

Conduit Size	Deduct Length	Springback				
		15°	30°	45°	60°	90°
1/2"	7 ½"	18	34	49	65	95
3/4"	9 ¼"	17	33	48	62	92
1"	11"	18	33	50	65	95
1 ¼"	13 ⅝"	15	30	45	63	93
1 ½"	15 ⅜"	20	36	51	65	95
2"	16 ⅞"	18	33	49	66	94

Chart B – EMT Conduit

Conduit Size	Deduct Length	Springback				
		15°	30°	45°	60°	90°
1/2"	7 ½"	19	34	49	65	96
3/4"	9 ¼"	19	34	50	65	97
1"	11"	19	34	50	65	97
1 ¼"	13 ⅝"	19	33	50	65	95
1 ½"	14 ⅞"	17	32	49	63	93
2"	16 ⅛"	17	33	48	64	95

Chart C – IMC Conduit

Conduit Size	Deduct Length	Springback				
		15°	30°	45°	60°	90°
1/2"	7 ½"	22	38	54	69	100
3/4"	9	20	36	48	66	98
1"	11"	20	35	52	67	99
1 ¼"	13 ⅝"	18	33	49	65	95
1 ½"	14 ⅞"	20	35	51	66	98
2"	16 ¼"	19	35	51	66	97

Chart C1 – PVC Coated Rigid Conduit

Conduit Size	Deduct Length	Springback				
		15°	30°	45°	60°	90°
1/2"	7 ½"	16	31	47	62	93
3/4"	9	15	31	46	62	93
1"	11"	16	32	47	63	94
1 ¼"	13 ⅝"	15	30	46	61	92
1 ½"	14 ⅞"	18	33	49	64	95
2"	16 ⅛"	19	34	50	65	96

NOTE: Springback figures are approximate.

Minimum Stub Length = Deduct Length plus 2"

OFFSET BENDING INFORMATION AND CHARTS

To locate bending marks for a desired offset:

1. Measure distance from end of conduit to start of bend and mark conduit. (Mark 1) See Figure 29a
2. Refer to chart E (page 30) for measurement “X" and deduct this distance from Mark 1 and place Mark 2 on conduit. See Figure 29b.
3. Refer to chart D (page 30) for center-to-center distance between marks. Measure this distance from Mark 2 and place Mark 3 on conduit. See Figure 29b.
4. Layout of bends is now complete. Next, place Mark 2 in line with front edge of shoe hook, then check springback chart (page 28) and make first bend. See Figure 29c.
5. Rotate conduit 180 degrees. Place Mark 3 in line with front edge of shoe hook, then check springback chart (page 28) and complete second bend.

Figure 29a

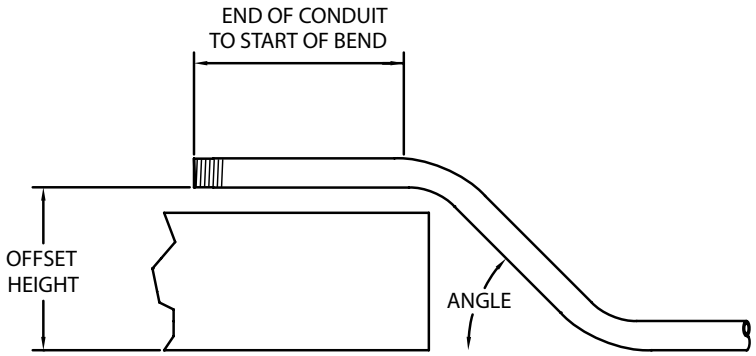

Figure 29b

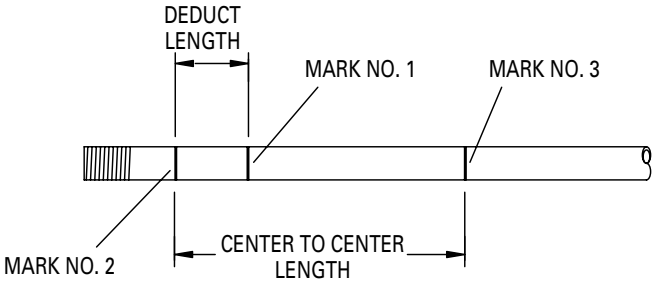

Figure 29c

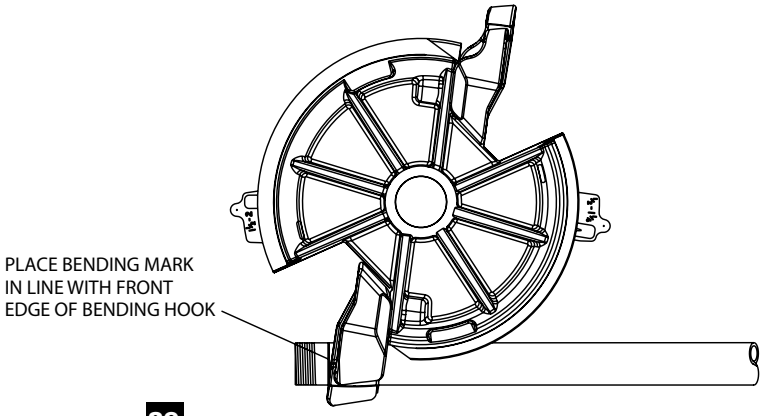

continued

CHART D

	15°		30°		45°	
OFFSET HEIGHT	MAX CONDUIT SIZE	CENTER TO CENTER	MAX CONDUIT SIZE	CENTER TO CENTER	MAX CONDUIT SIZE	CENTER TO CENTER
2"	3/4"	7-3/4"				
4"	1-1/2"	15-7/16"	3/4"	7-5/16"		
6"	2"	23-3/16"	1"	11-15/16"	1/2"	8-5/16"
8"	2"	30-7/8"	1-1/2"	15-15/16"	1"	11-1/16"
10"	2"	38-5/8"	2"	19-15/16"	1-1/4"	13-13/16"
12"	2"	46-3/8"	2"	23-15/16"	1-1/2"	16-5/8"
14"	2"	54-1/16"	2"	27-15/16"	2"	19-7/16"
16"	2"	61-13/16"	2"	31-15/16"	2"	22-1/4"
18"	2"	69-9/16"	2"	35-15/16"	2"	25-1/16"
20"	2"	77-1/4"	2"	39-15/16"	2"	27-15/16"
22"	2"	85"	2"	43-15/16"	2"	30-3/4"

FIGURES ARE APPROXIMATE

TO LOCATE THE CENTER TO CENTER DISTANCE OF OFFSET BENDING MARKS OTHER THAN THOSE LISTED IN CHART D, USE THE FOLLOWING MULTIPLIERS: MULTIPLY THE HEIGHT OF THE OFFSET DESIRED BY 3.86 ON 15° BENDS, 2 ON 30° BENDS, AND 1.4 ON 45° BENDS.

CHART E

CONDUIT SIZE	1/2"	3/4"	1"	1-1/4"	1-1/2"	2"
"X"	2-1/2	3-1/16	3-1/16	4	4-3/4	4-3/4

⚠ WARNING

ALWAYS disconnect power supply before removing any guards or covers and before servicing this bender. Failure to do so may result in serious injury or death.

1. The Gear Box is filled with oil at the factory and should not require periodic flushing. If the Gear Box is opened for repair, flush by filling the unit with an AGMA #7 oil. Next, run the unit with no load for 3 minutes. Then, drain and refill the unit with 28 fluid ounces of an AGMA #7 oil such as the ones listed below.

   Amoco – Amoco Worm Gear Oil
   Chevron – Cylinder Oil 460X
   Exxon – CYLESSTIC TK460
   Mobil – 600 W Cylinder Oil
   Shell – Sun Gear Oil 7C

2. To inspect FRONT #60 chain tension:
   - Remove face plate.
   - To adjust, loosen hex screw with ¾" wrench and rotate chain tensioner toward chain as shown until chain moves no more than a total of ¼". See Figure 31 below.
   - Grease chain periodically with a good quality MP grease.

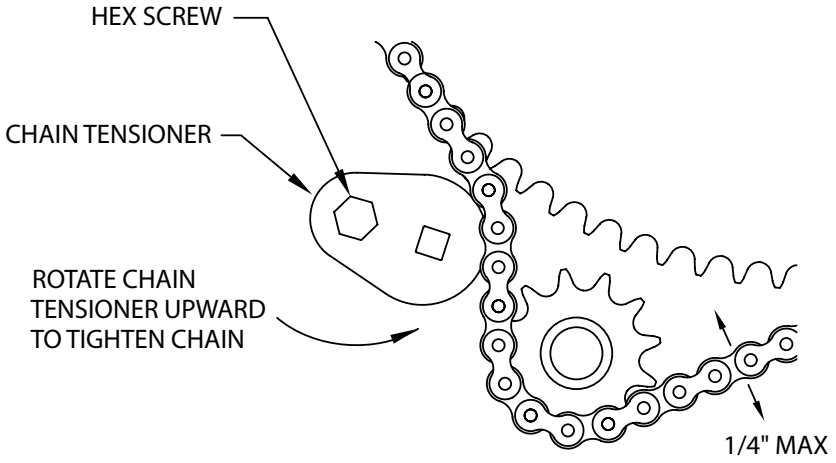

Figure 31

3. To inspect REAR #40 chain tension:
   - Check chain tension after an initial break-in period of 2 - 3 hours of use and tighten per the instructions below. See Figure 32. Thereafter, inspect monthly.
   - Remove the chain guard by taking out the 2 mounting screws.
   - Loosen 8 bolts (4 on top and 4 on bottom) that hold the gear box in position.
   - To tighten chain, move the gear box to the left and re-tighten bolts.
   - For correct tension, chain should deflect approximately ⅛".

   NOTE: Be sure to keep the gear box and motor in line with the bender.

   - Grease chain periodically with a good quality MP grease.

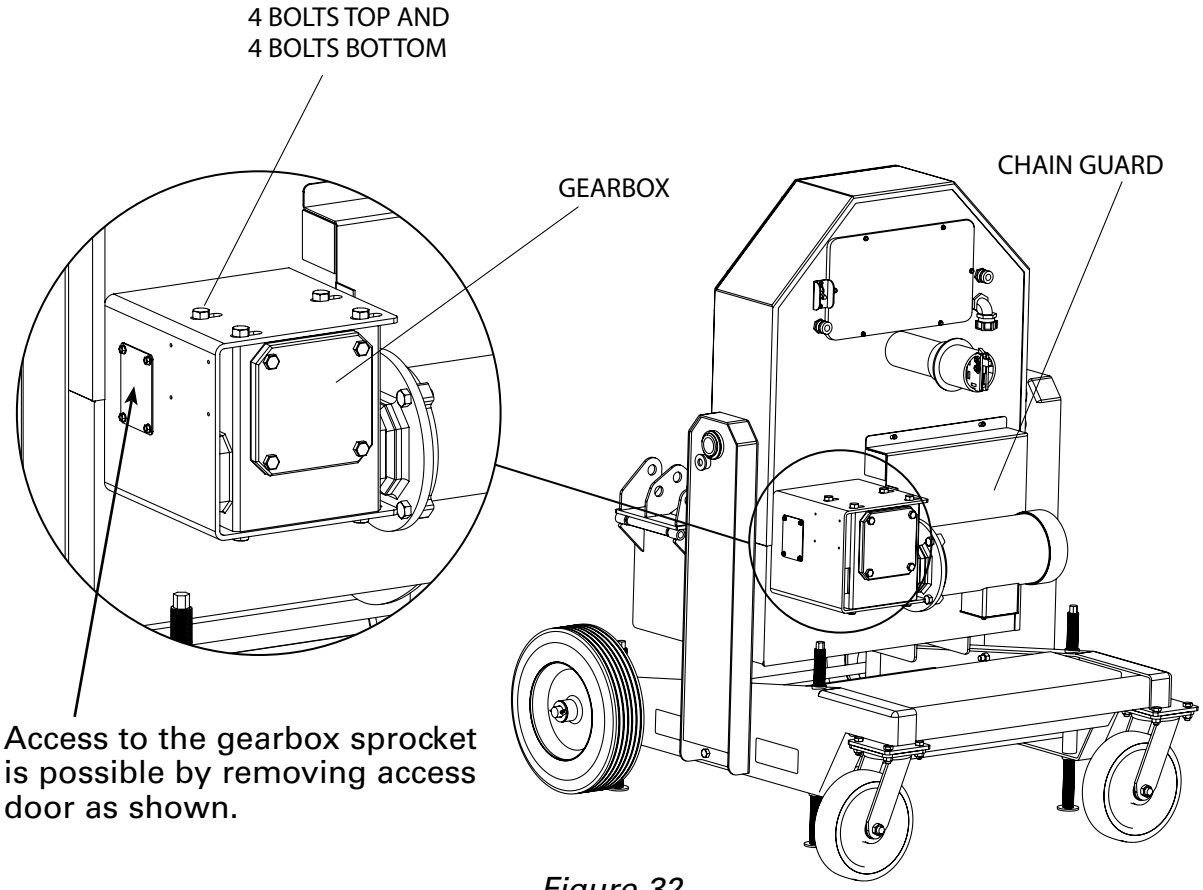

Figure 32

4. Bend Angle Limit Switch Adjustment:

   If the Bend Angle Limit Switch becomes too loose or too tight, the spring tension can be adjusted as follows:

   - Disconnect power to the bender.
   - To access the Bend Angle Limit Switch, remove the 14 screws that hold the face plate onto the bender frame.
   - To adjust the spring pressure, loosen or tighten the 2 hex nuts (Item #125).
   - Check the tension by sliding the Bend Angle Limit Switch in the slot.
   - Reinstall the face plate.

5. Roller Supports:

   - We recommend lubrication of the built-in support roller system rollers and roller support unit rollers every 6 months. Use a good quality MP grease. A grease fitting is provided for the roller support cam shaft (see item #91, page 40).

TROUBLESHOOTING

⚠ WARNING

ALWAYS disconnect power supply before removing any guards or covers and before servicing this bender. Failure to do so may result in serious injury or death.

	Problem	Cause	Diagnosis	Cure
1.	Bender will not operate	Power source	Check for voltage at power source	If power is on, go to (#3)
2.	No power at bender	Bad power cord	Ohm cord for broken wire	Replace cord
3.	Power to bender but will not operate	Circuit break / power switch in the off position	Check power on load side of breaker to neutral with volt meter	Turn circuit breaker on. If on, go to the next step.
		Fuse blown	Ohm circuit for short	Replace
		Control Transformer bad	Check voltage in and out, if input but no output	Replace
		Contactor bad	Check contacts and ohm coil for open circuit	Replace
		Bridge rectifier bad	Check with ohm meter	Replace
		Switch bad	Check with ohm meter	Replace
		Motor bad	Check brushes and ohm for open or short armature	Replace
4.	Motor runs but will not bend	Chain from gear box to jack shaft broken	Remove cover and visually check for broken parts	Replace
		Bad gear box	Motor running but no output through gear box	Replace
		Chain from jack shaft to shoe sprocket broken	Remove cover and visually check for broken parts	Replace
		Key between motor and gear box missing	Remove motor from gear box	Replace key
5.	Bender operates in one direction only	Bad FWD / REV switch	Ohm switch for open contact or shorted contacts	Replace
		Bad pendant cord	Ohm for broken wire	Replace
		Bad contactor	Check contact and ohm for open circuit	Replace
6.	Contactors chatter	Low power to bender	Check with amp meter	Do not use long drop cords

	Problem	Cause	Diagnosis	Cure
7.	Pointer passes bend angle limit switch in the clockwise direction.	Magnet damaged, missing or greater than 1/2" from bend angle limit switch	Visual check	Replace the magnet(s) or the pointer
		Bend angle limit switch malfunction	Magnet is installed and within 1/2" of bend angle limit switch	Replace bend angle limit switch

EXPLODED VIEWS

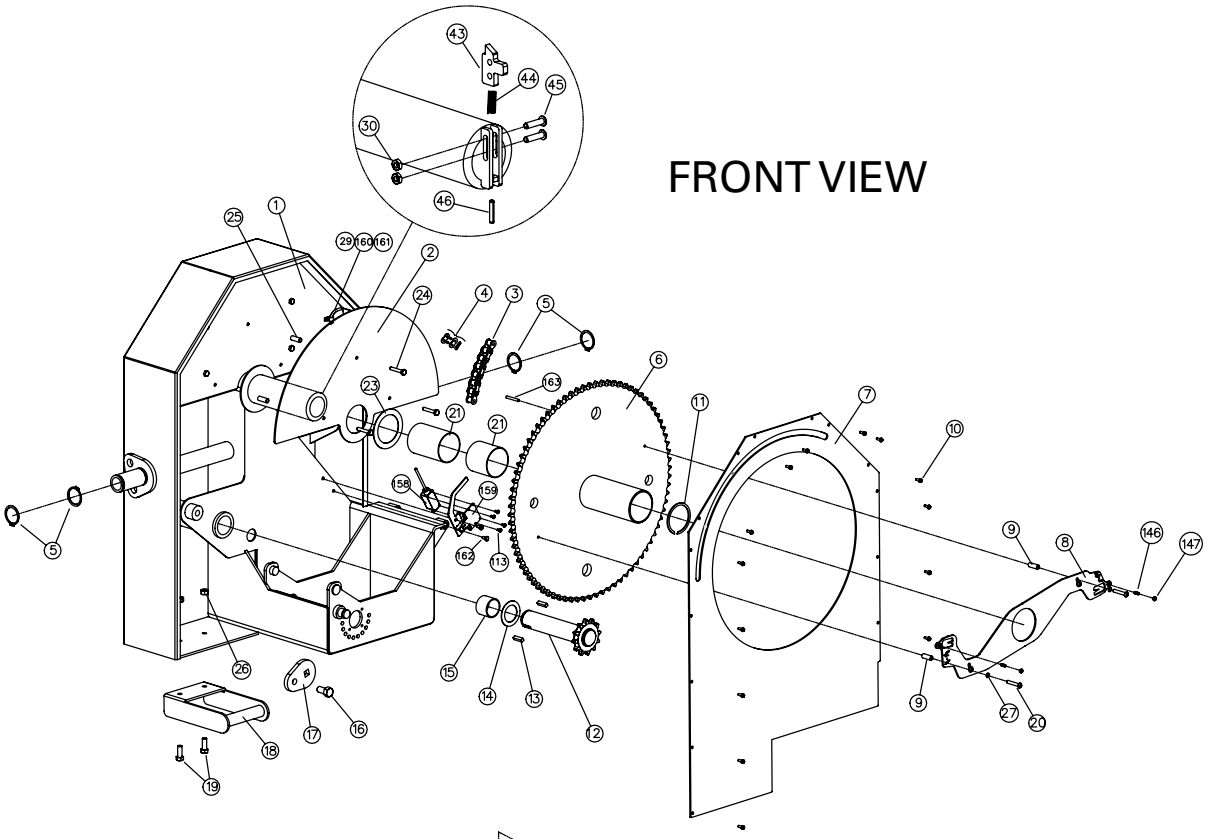

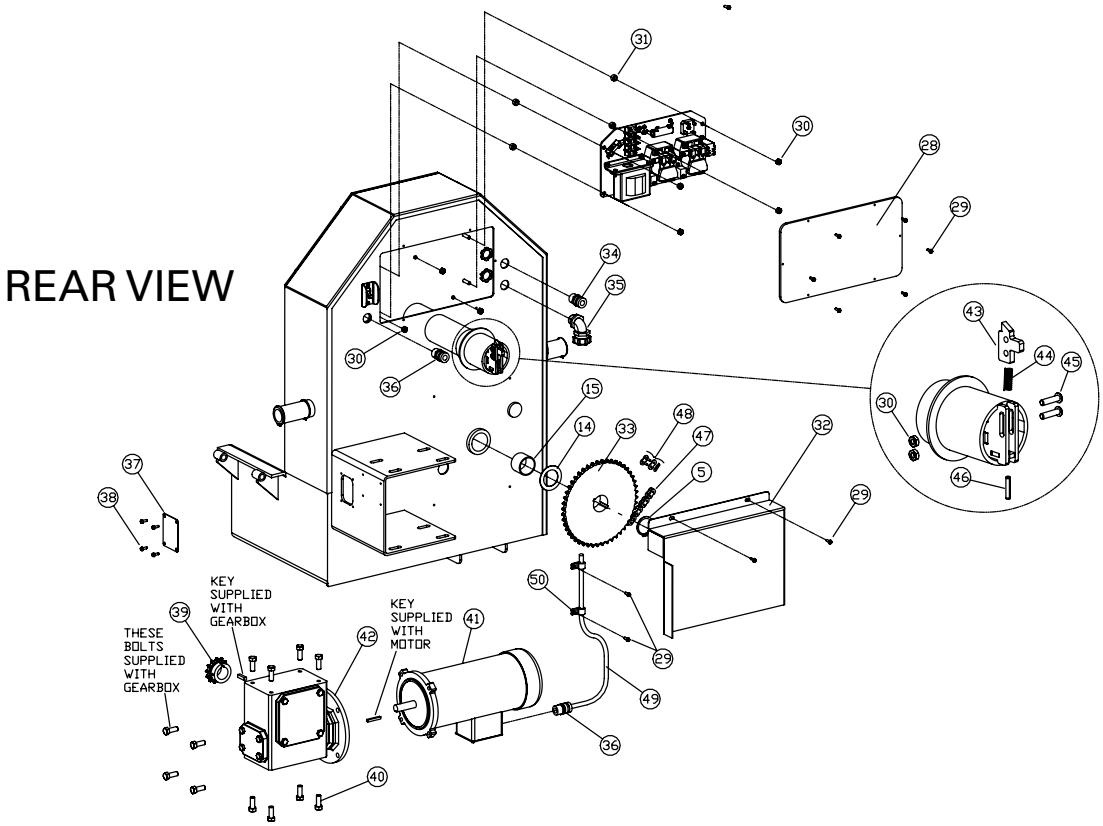

PARTS LIST — 747 SERIES ELECTRIC BENDER

ITEM #	QTY	DESCRIPTION	PART #
1	1	BENDER FRAME	747-951
2	1	GUARD PLATE	747-913
3	1	CHAIN, #60	77-011A
4	1	MASTER LINK, #60	77-010
5	5	RETAINING RING, 1-1/2"	77-067
6	1	SPROCKET-MAIN	747-923
7	1	FACE PLATE	747-21
8	1	POINTER	747-722
9	2	SPACER	747-724
10	14	SCREW-#8 x 1/2 SELF DRILL	452-6A
11	1	RETAINING RING, 2-1/2"	77-007
12	1	SPROCKET SHAFT	747-825
13	2	KEY-SQUARE, 1/4" x 3/4" LONG	77-006A
14	2	PHENOLIC WASHER	77-008
15	2	SLEEVE BEARING	77-009
16	1	SCREW-HEX HD, 1/2-13 x 1-1/4" LONG	77-025
17	1	CHAIN TENSIONER	77-413
18	1	HANDLE	747-950
19	10	SCREW-HEX HD, 3/8-16 x 1"	524-11
20	2	SCREW-BUTTON HEAD, 1/4-20 x 1-1/2" LONG	747-17
21	2	SLEEVE BEARING	77-070
23	1	PHENOLIC WASHER	77-014
24	3	SCREW-HEX HD, 1/4-20 x 1-1/4" LONG	747-29
25	3	SPACER	747-935
26	18	NUT-HEX, 3/8-16 NYLON INSERT	2-1501-4
27	2	WASHER-LOCK, 1/4"	450-14G
28	1	COVER-ELECTRICAL	747-822
29	11	SCREW-HEX, 10 x 1/2 #2 TEKS	77-033A
30	7	NUT-HEX,1/4-20 (NYLON INSERT)	9518SR-12
31	4	SPACER	450-20
32	1	REAR CHAIN COVER	77-468
33	1	SPROCKET-#40B48	77-288
34	2	STRAIN RELIEF	77-028A
35	1	STRAIN RELIEF-90°	747-15
36	2	STRAIN RELIEF	77-028
37	1	ACCESS COVER	77-714
38	13	SCREW-#8-32 X 3/8 THD CUTTER	77-004A
39	1	SPROCKET-#40B13	77-237
40	8	BOLT-FLANGE LOCK 3/8-16 x 3/4	77-040
41	1	MOTOR	77-039
42	1	GEARBOX	77-037
43	1	PAWL-SPARE SHOE	747-882
44	2	SPRING	747-5
45	4	SCREW-CAP,BUTTON SOCKET 1/4-20 x 1"	747-16
46	3	ROLL PIN-3/16 X 1"	747-18
47	1	CHAIN-#40	77-031
48	1	MASTER LINK-#40	77-032
49	1	MOTOR WIRE	747-937
50	2	CORD RETAINER	747-14
51	4	NUT-HEX, 1/4-20 THIN (NYLON INSERT)	747-30
113	4	SCREW, PAN HD. PHILLIPS, 10-32 x 3/8"	451-22
146	2	SCREW – FLAT SKT, SS, 6-32 x 1/4"	747-725
147	2	MAGNET	747-726
151	1	PAWL, RETAINER – FRONT SHOE	747-984
158	1	SWITCH, STOP	747-42
159	1	BRACKET, STOP SWITCH	747-101
160	1	RETAINER, CORD	66-62
161	1	CABLE – SWITCH	747-106
162	2	SCREW, HHCS – 1/4"-20 x 1/2"	750-20
163	2	PIN – ROLL	2-1111

EXPLODED VIEWS

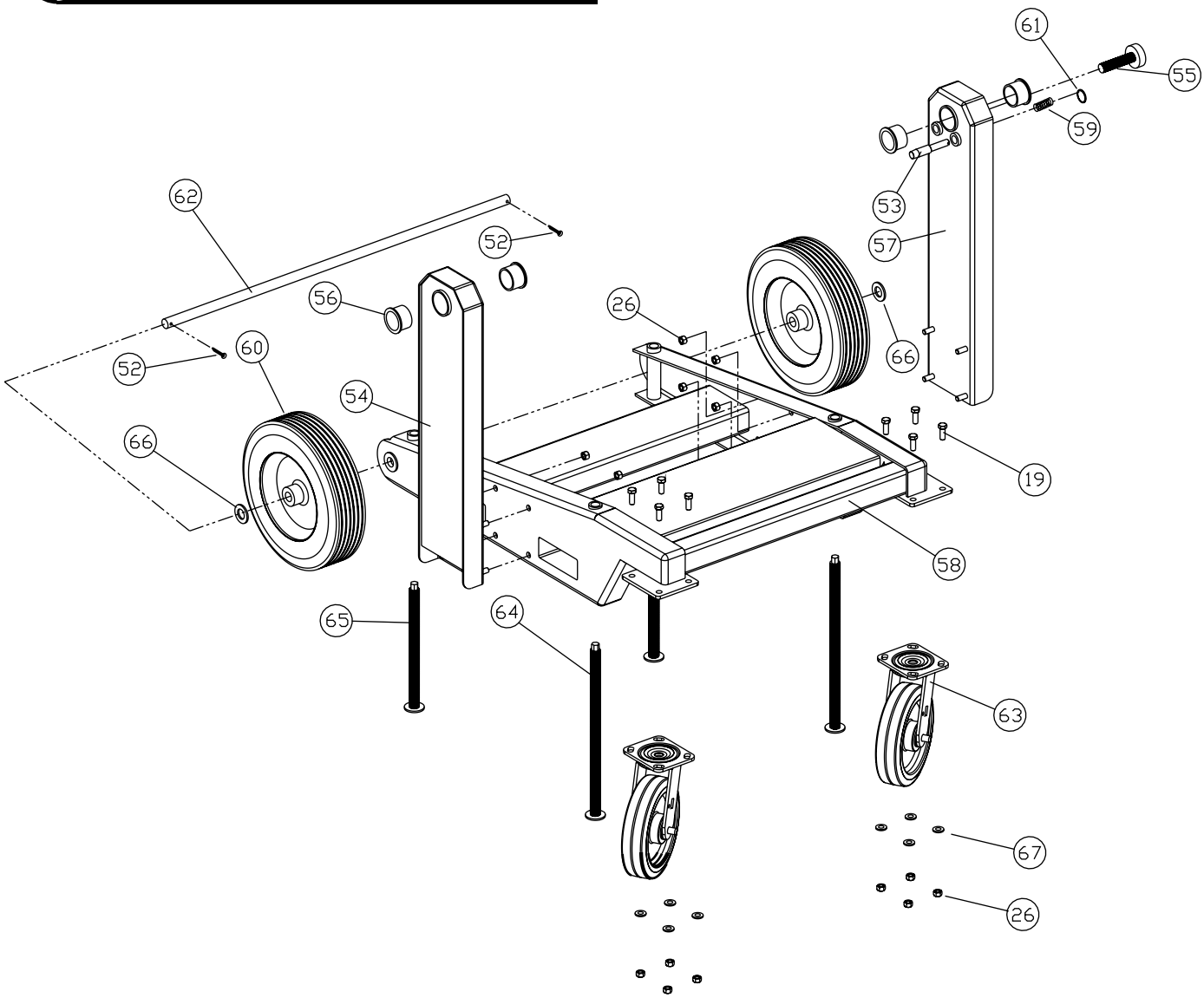

ITEM #	QTY	DESCRIPTION	PART #
52	2	COTTER PIN-3/16 X 1-1/4" LONG	77-016
53	1	POSITIONING PIN	747-860
54	1	UPRIGHT	747-906
55	1	POSITION LOCKING SCREW	747-927
56	4	BUSHING-1-1/2" ID, 1-3/4" OD X 3/4" OAL	747-3
57	1	UPRIGHT	747-905
58	1	CARRIAGE	747-200
59	1	SPRING	747-4
60	2	WHEEL	99-5
61	1	RING	8099-3
62	1	AXLE	747-921
63	2	CASTER	747-1
64	2	LEVELING SCREW (LONG)	747-926
65	2	LEVELING SCREW (SHORT)	747-925
66	3	WASHER-3/4 SAE	77-017
67	8	WASHER-3/8 USS	506-3

EXPLODED VIEWS

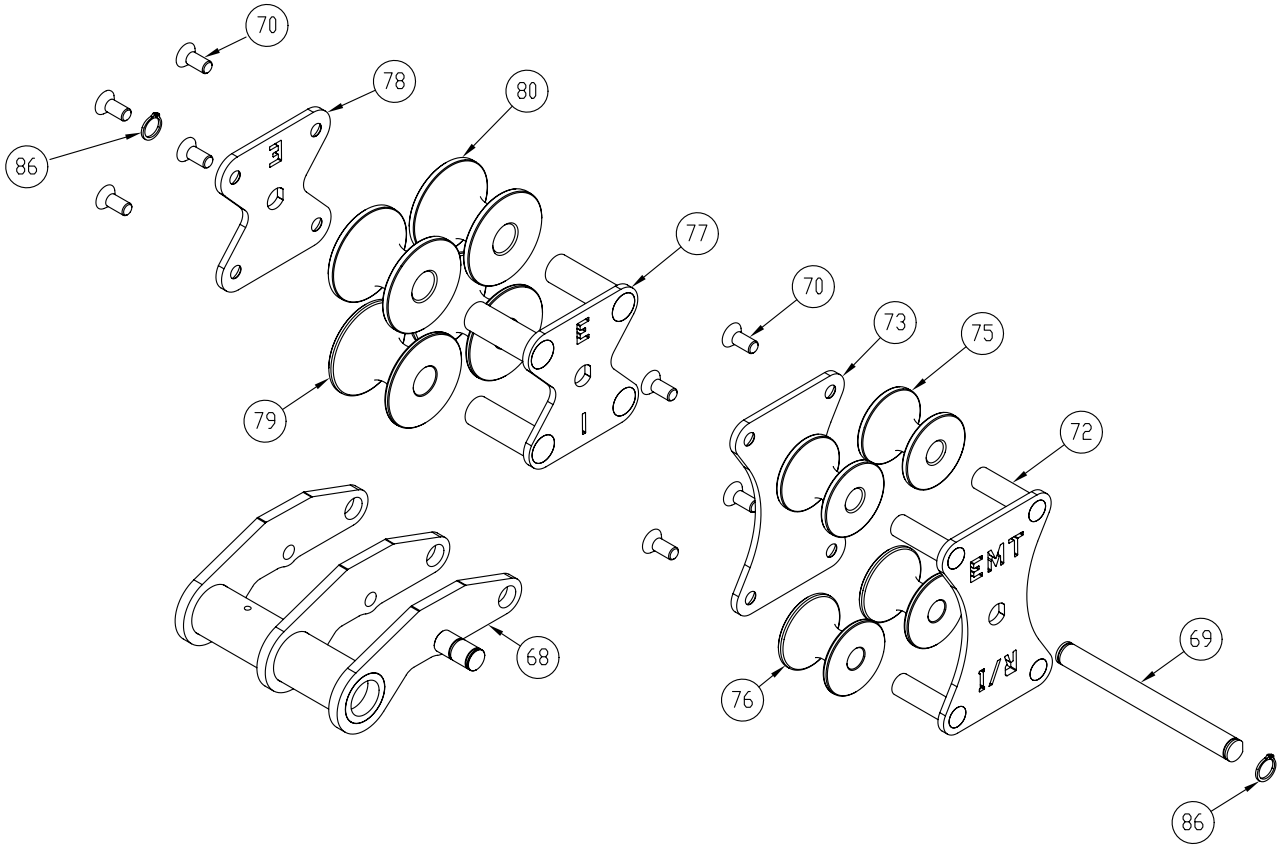

ITEM #	QTY	DESCRIPTION	PART #
68	1	ARM WELDMENT	747-996
69	1	SUPPORT PIN-ROLLER SUPPORT	747-857
70	8	SCREW-FLAT SOCKET - 7/16-14 X 1"	2-1118
72	1	ROLLER PLATE 1-1/2" (EMT/IMC)	747-958
73	1	ROLLER PLATE 1-1/2"	747-932
75	2	ROLLER-EMT 1-1/2"	2-1103
76	2	ROLLER-IMC 1-1/2"	2-1204
77	1	ROLLER PLATE WITH E/I	747-944
78	1	ROLLER PLATE 2"	747-933
79	2	ROLLER-IMC 2"	2-1205
80	2	ROLLER-EMT 2"	2-1116
86	2	RING, RETAINING – 3/4"	2-1109

EXPLODED VIEWS

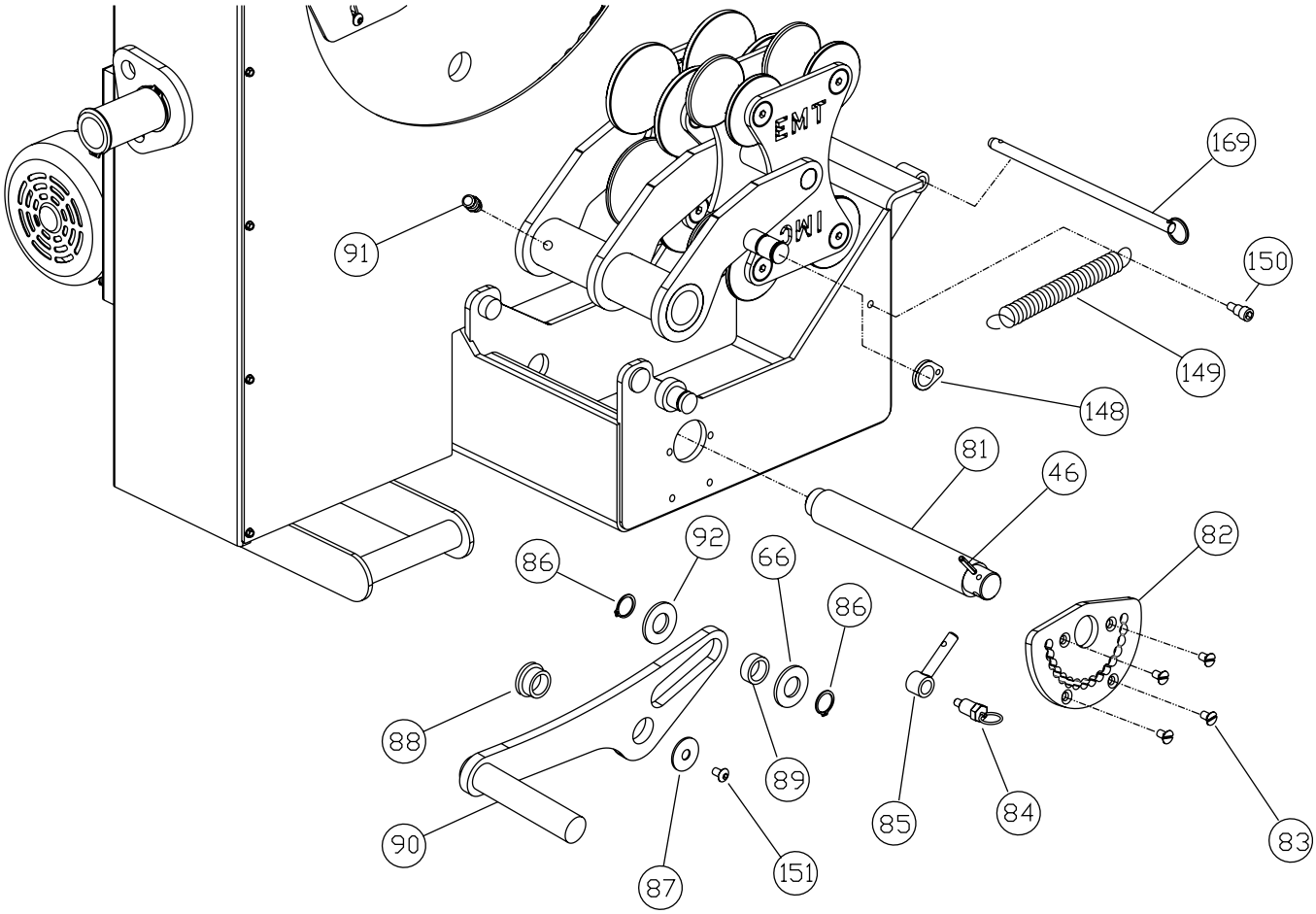

ITEM #	QTY	DESCRIPTION	PART #
46	1	PIN – ROLL 3/16 X 1	747-18
66	1	WASHER – 3/4 SAE	77-017
81	1	CAM SHAFT	747-840
82	1	CAP-ADJUSTMENT	747-879
83	4	SCREW-FLAT SOC. 1/4-20 X 1/4" LONG	747-20
84	1	PLUNGER-SPRING	747-2
85	1	CAM PIN	747-852
86	2	RETAINING RING-3/4	2-1109
87	1	PIVOT ARM WASHER	747-45
88	1	BUSHING-1" OD X 3/4"ID X 3/4" LONG	747-44
89	1	HANDLE ROLLER	747-938
90	1	LEVER	747-997
91	1	FITTING-GREASE, 1/4-28	88-39
92	1	WASHER-LEVER	754-183
148	1	RING, SPRING	747-008
149	1	SPRING, EXTENSION	747-37
150	1	SCREW, SHOULDER	747-38
151	1	SCREW – BHSC 1/4-20 X 1/2"	99-74
169	1	PIN, HINGE	77-047

EXPLODED VIEWS

ELECTRICAL PLATE

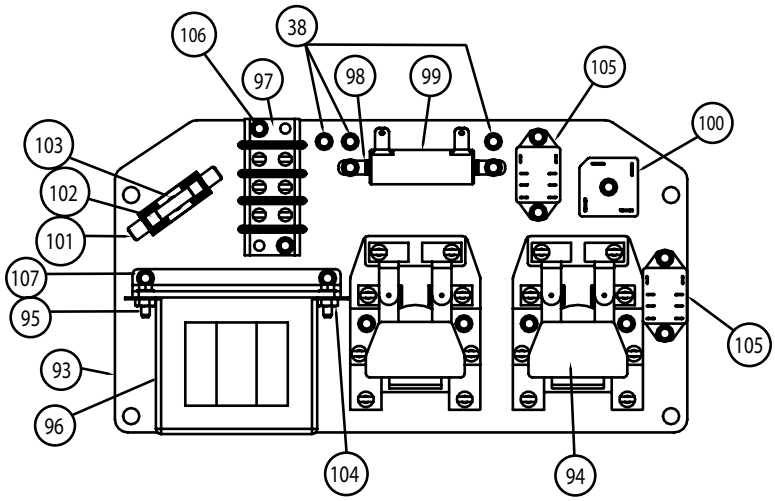

CIRCUIT BREAKER SWITCH

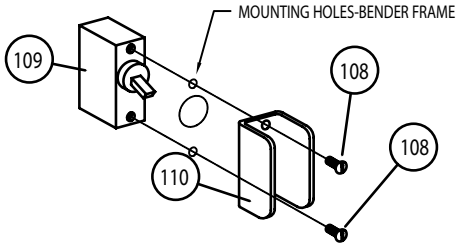

REMOTE PENDANT

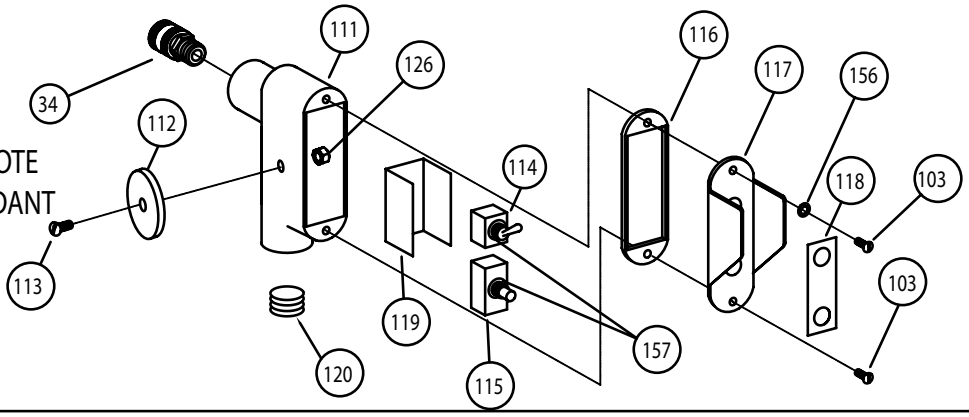

BENDING ANGLE LIMIT SWITCH

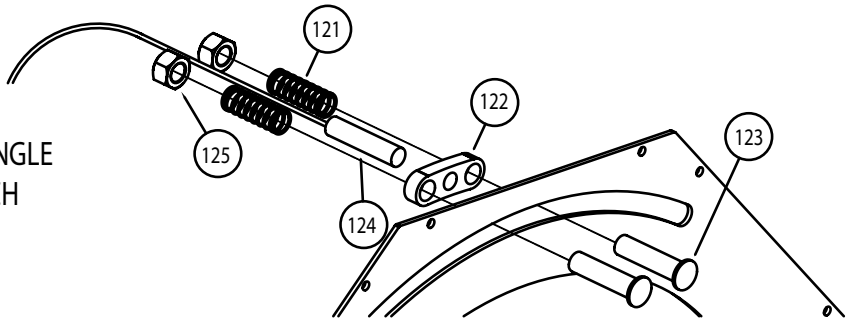

STOP SWITCH

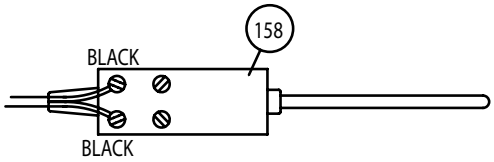

PARTS LIST — 747 SERIES ELECTRIC BENDER

ITEM #	QTY	DESCRIPTION	PART #
93	1	PLATE-ELECTRICAL	77-339
94	2	CONTACTORS	77-054
95	2	SCREW-#8-32 X 1/2" THD CUTTER	77-004
96	1	TRANSFORMER-24 VOLT	77-055
97	1	TERMINAL BLOCK	77-057
98	2	BRACKET-RESISTOR	77-058A
99	1	RESISTOR	77-058
100	1	BRIDGE RECTIFIER	77-060
101	1	FUSE HOLDER	77-066
102	1	FUSE	77-056
103	3	SCREW-#8-32 X 1/2" RD. HD. PHILLIPS	77-072
104	2	NUT-HEX #8-32	453-16A
105	2	RELAY	747-7
106	7	SCREW-#8-32 X 5/8" THD CUTTER	77-004B
107	1	BRACKET-TRANSFORMER	77-387
108	2	SCREW-PAN HEAD PHILLIPS, 6-32 X 3/8"	77-061
109	1	CIRCUIT BREAKER	77-062
110	1	COVER-CIRCUIT BREAKER	77-063
111	1	CONDULET-1/2"	77-048
112	1	MAGNET	747-19
113	1	SCREW-PAN HD PHILLIPS,10-32 X 3/8"	451-22
114	1	SWITCH-FORWARD/REVERSE	77-051
115	1	SWITCH-JOG	77-052
116	1	GASKET	77-451
117	1	GUARD-PENDANT SWITCH	77-128
118	1	DECAL-PENDANT	77-064
119	1	FISH PAPER-INSULATING	77-065
120	1	PLUG-PLASTIC	77-3-1A
121	2	SPRING	8099-1
122	1	SENSOR MOUNT	747-872
123	2	SLIDE BOLT	747-867
124	1	SWITCH-PROXIMITY	747-723
125	2	NUT-HEX 1/4-20 THIN NYLON INSERT	747-28
126	1	NUT-HEX #10-32	451-21
156	1	WASHER, LOCK – #8 EXT. TOOTH	747-39
157	2	WASHER, LOCK – 15/32" INT. TOOTH	747-40

EXPLODED VIEWS

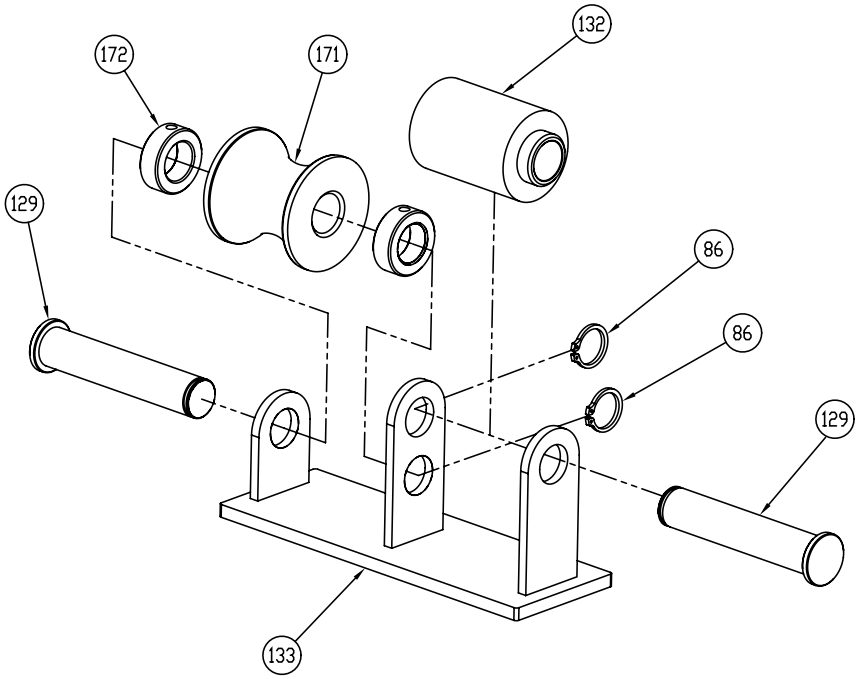

PIN-ON URETHANE ROLLER SUPPORT
FOR 1-1/2" AND 2" EMT, IMC AND RIGID
CONDUIT (PART # 747-33)

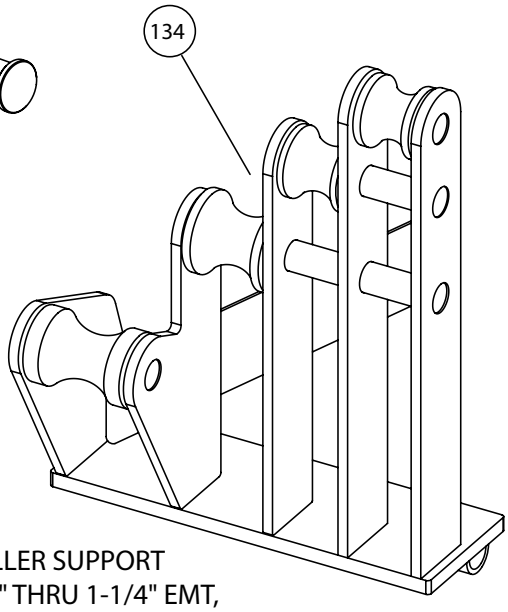

PIN-ON 4 ROLLER SUPPORT
UNIT FOR 1/2" THRU 1-1/4" EMT,
IMC AND RIGID CONDUIT (PART # 747-972)

ITEM #	QTY	DESCRIPTION	PART #
86	2	RETAINING RING — 3/4"	2-1109
129	2	ROLLER PIN — 2"	747-892
132	1	ROLLER — URETHANE	747-894
133	1	FRAME — ROLLER SUPPORT	747-953
134	1	ROLLER SUPPORT COMPLETE-1/2" THRU 1-1/4" RIGID, EMT, IMC, CONDUIT	747-972
171	1	ROLLER — 2"	2-1005B
172	2	COLLAR — 2" ROLLER	2-4000-001

2-2201 ½" to 1¼" Bending Shoe Assembly for EMT/IMC/RIGID

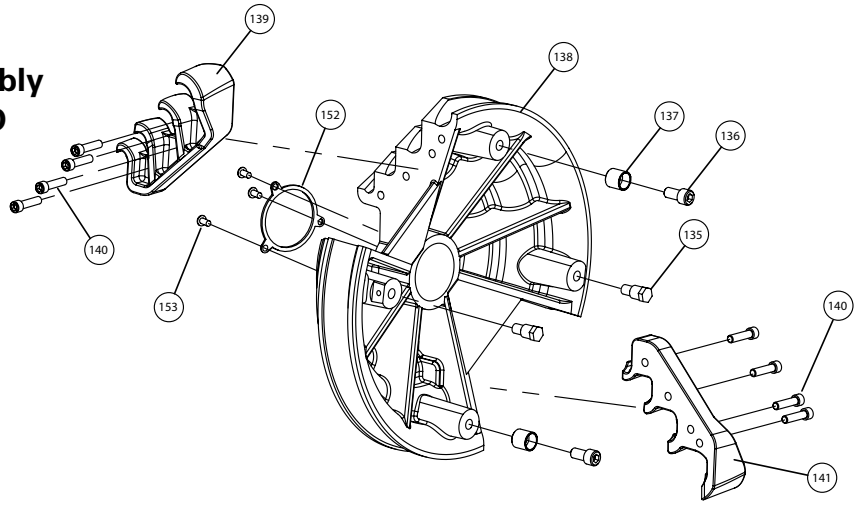

ITEM #	QTY	DESCRIPTION	PART #
135	2	DRIVE STUD	2-1304
136	2	SCREW-CAP,SOC 1/2-13 X 1"	2-2202-2
137	2	SHOE STUD ADAPTER	747-930
138	1	SHOE CASTING -1/2"-1-1/4" EMT/IMC/RIGID	2-2201-957
139	1	HOOK-1/2"-1-1/4" RIGID/IMC	2-2202
140	8	SCREW-CAP,SOCKET 3/8-16 X 1.25	99-59
141	1	HOOK-1/2"-1-1/4" EMT	2-2203
152	1	STEEL RING	747-991
153	3	SCREW, BUTTON HD. SKT. – 1/4 - 20 X 1/2"	99-74

2-2301 1½" to 2" Bending Shoe Assembly for EMT/IMC/RIGID

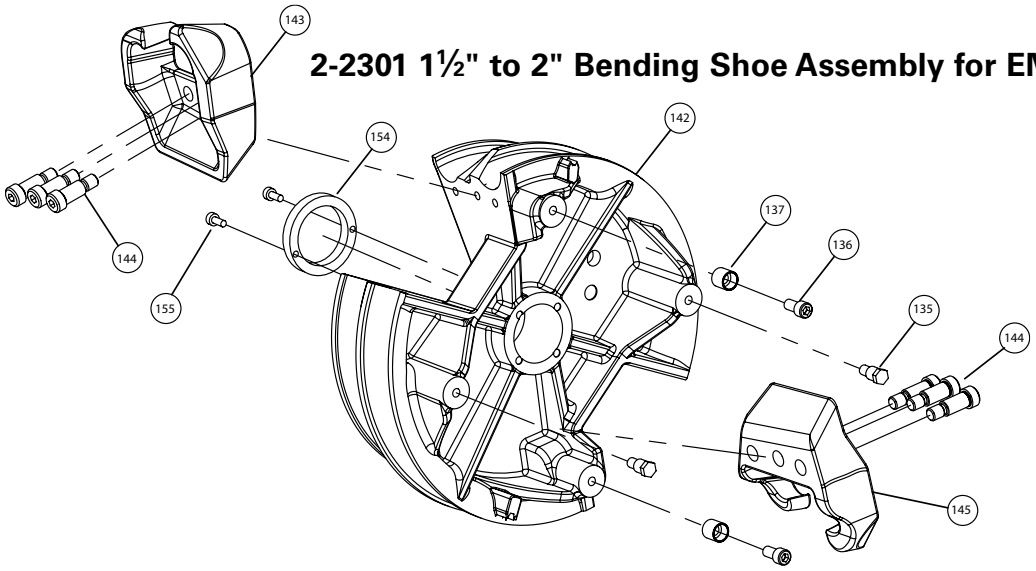

ITEM #	QTY	DESCRIPTION	PART #
135	2	DRIVE STUD	2-1304
136	2	SCREW-CAP,SOC 1/2-13 X 1"	2-2202-2
137	2	SHOE STUD ADAPTER	747-930
142	1	SHOE CASTING 1½"-2" EMT/IMC/RIGID	2-2301-839
143	1	HOOK-1½"-2" RIGID/IMC	2-2302
144	6	SCREW-SHOULDER,SOCKET 3/4 X 1 1/2"	2-2301-2
145	1	HOOK-1½"-2" EMT	2-2303
154	1	STEEL RING	747-992
155	2	SCREW, SKT. HD. CAP - 1/4-20 X 3/4"	747-41

2-3200-7 ½" to 2" Bending Shoe Assembly for PVC Coated Rigid Conduit

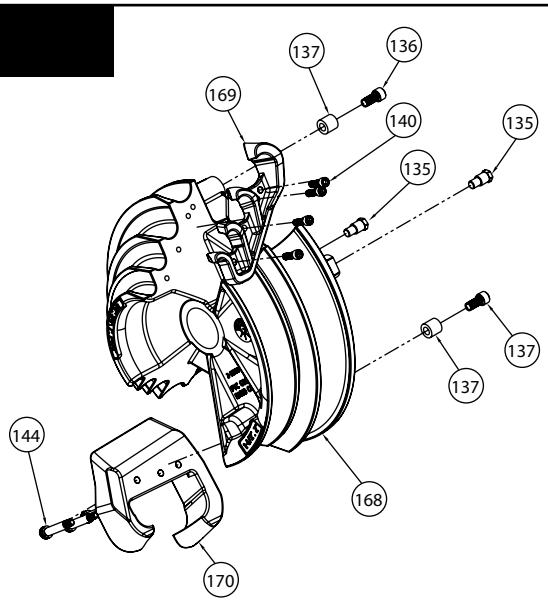

ITEM #	QTY	DESCRIPTION	PART #
135	2	STUD – BENDER	2-1304
136	2	SCREW – SOCKET HEAD CAP (1/2-13 X 1)	2-2202-2
144	3	SCREW – SHOULDER SOCKET (3/4 X 1 1/2)	2-2301-2
168	1	SHOE – MACHINED 1/2" – 2" PVC	2-3200-102
169	1	HOOK – MACHINED 1/2" – 1.25" PVC	2-3202
170	1	HOOK – MACHINED 1.5" – 2" PVC	2-3203
137	2	SHOE STUD ADAPTER	747-930
140	4	3/8-16 X 1 1/4 LG SHCS	99-59

2-4300-7 ½" to 2" Roller Support Assembly for PVC Coated Rigid Conduit

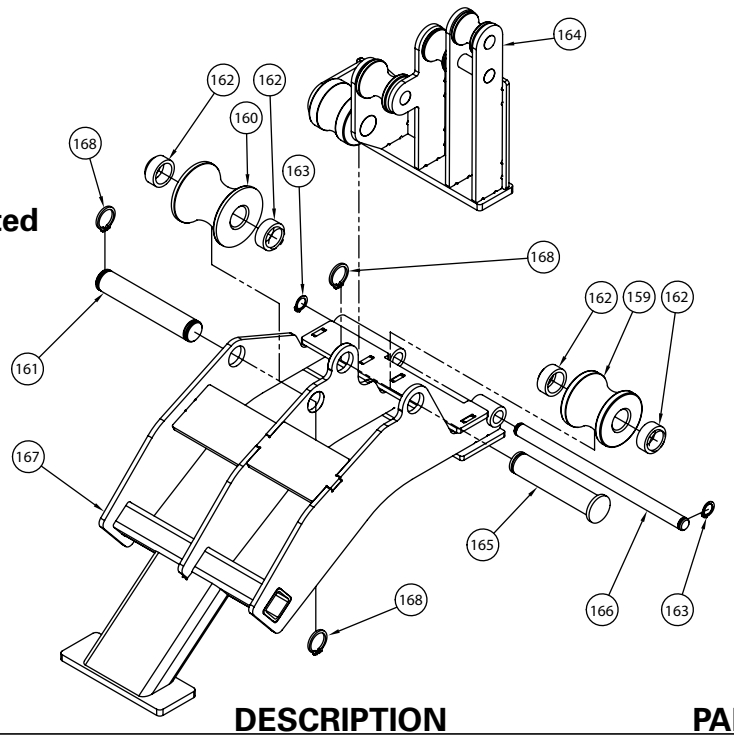

ITEM #	QTY	DESCRIPTION	PART #
159	1	ROLLER – 1.5" PVC	2-1005A
160	1	2" ROLLER PVC	2-1005B
161	1	PIN – 1 1/2" ROLLER	2-4100-126
162	4	SPACER	747-938
163	2	7/16" RETAINER RING	2-4000-123
164	1	50"–1.25" ROLLER, WELDMENT	2-4300-7-104
165	1	PIN – ROLLER	747-892
166	1	.438" X 6.6" HINGE PIN	2-4300-7-125
167	1	1 1/2"–2" ROLLER SUPPORT FRAME	2-4300-7-126
168	3	3/4" RETAINING RING	2-1109
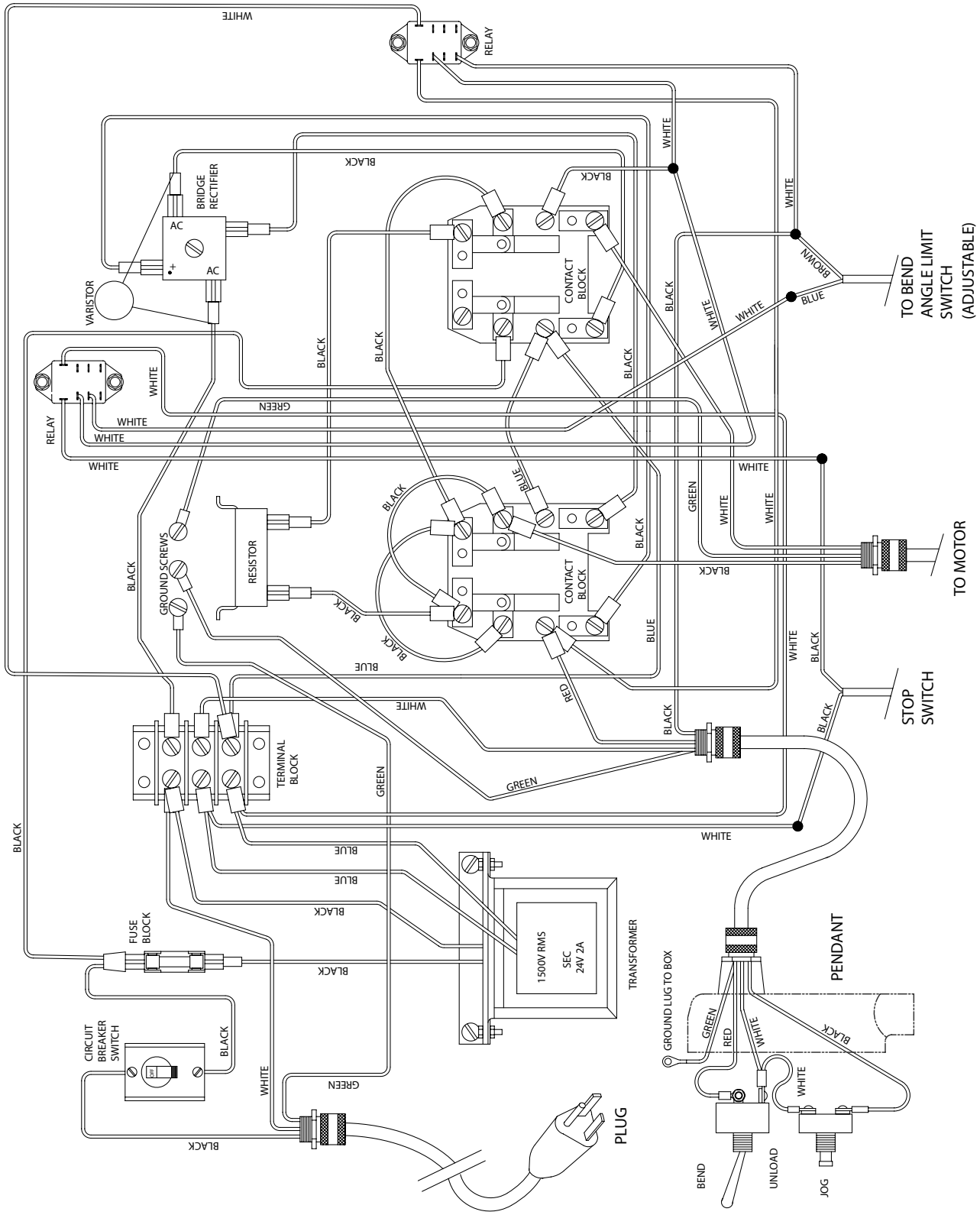
ELECTRICAL SYSTEM DIAGRAM